Draining Fluids and Oil Filter Removal

Special Tools

EN-44887 Oil Filter Wrench

For equivalent regional tools, refer to Special Tools.

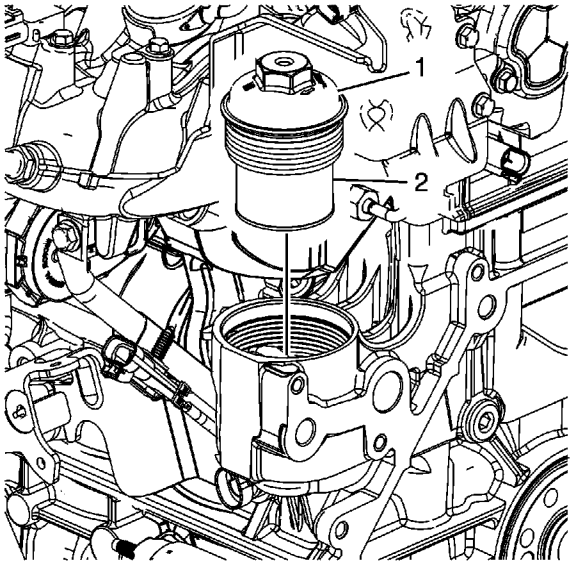

1. Use *EN-44887* wrench to remove the oil filter cap (1). Remove the oil pan drain plug and allow the oil to drain out.
2. Remove the oil filter (2) from the cap and discard.
3. Clean the oil filter housing in the engine block.

   Caution: Refer to Fastener Caution in the Preface section.

4. Install the oil pan drain plug and tighten to **25 N·m (18 lb ft)**.
5. Remove the water pump drain plug from the water pump and allow the coolant to drain from the water jacket.
6. Apply sealant GM P/N 12346004 (Canadian P/N 10953480) or equivalent to the water pump drain plug.
7. Install the water pump drain plug and tighten to **20 N·m (15 lb ft)**.
8. If cleaning or repairing the engine block, it is not necessary to reinstall the plugs.

Crankshaft Balancer Removal

Special Tools

- *EN-38122-A* Crankshaft Balancer Holder
- *EN-43653* Flywheel Holding Tool

For equivalent regional tools, refer to Special Tools.

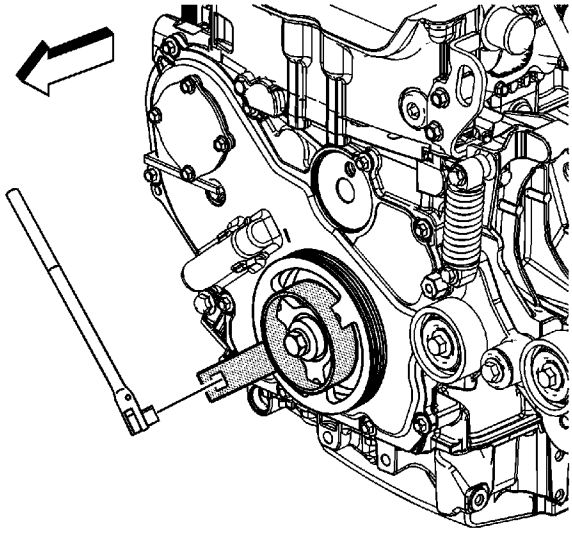

Note: *EN-43653* flywheel holding tool may be used instead of *EN-38122-A* crankshaft balancer holder to prevent crankshaft rotation.

1. Install *EN-38122-A* holder .
2. Remove the balancer retaining bolt and washer. Use *EN-38122-A* holder and a breaker bar to prevent the crankshaft from rotating when loosening the bolt. Discard the bolt.

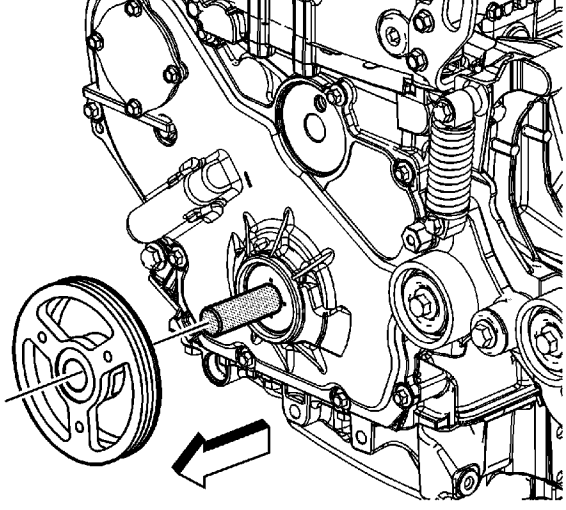

3. Remove the crankshaft balancer assembly using a universal removal tool.

Engine Flywheel Removal

Special Tools

J 43653 Flywheel Holding Tool

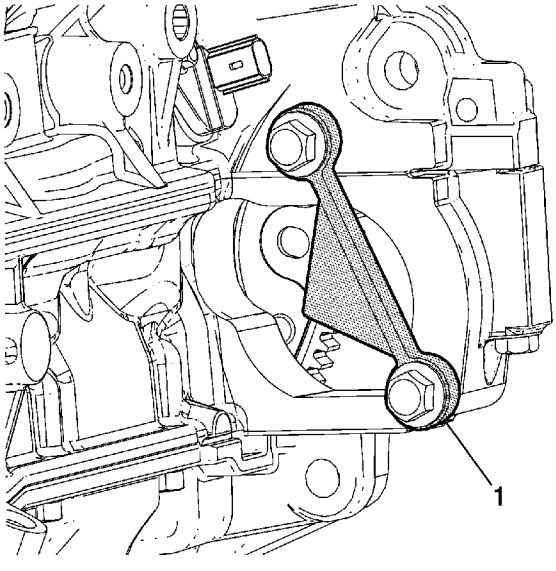

1. Install J 43653 (1) to prevent crankshaft rotation.

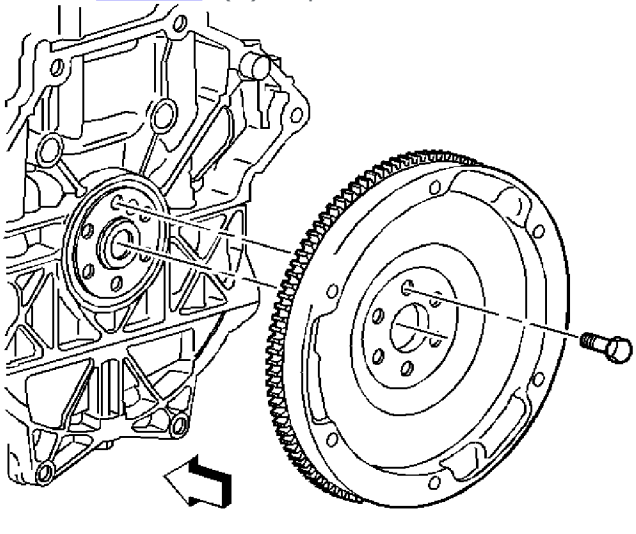

2. Remove the flywheel attaching bolts.
3. Remove the flywheel, if the vehicle has a manual transmission.

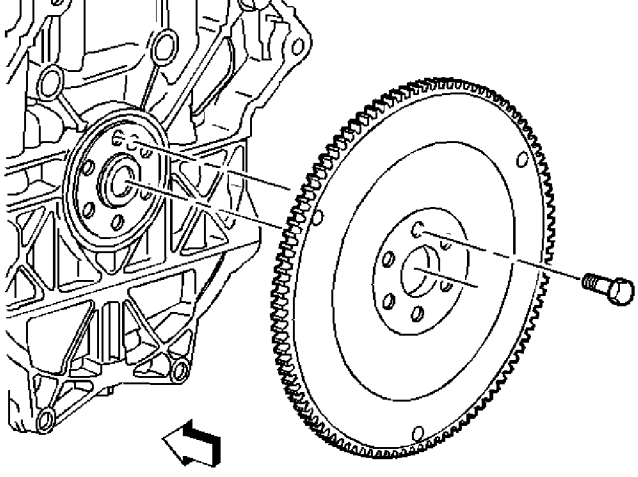

4. Remove the flywheel retainer for vehicles with automatic transmission.
5. Remove the flywheel, if the vehicle has an automatic transmission.
6. Clean the thread adhesive from the flywheel bolt holes. Use a nylon bristle brush to clean the holes in the crankshaft.
7. Remove J 43653 .

Oil Level Indicator and Tube Removal

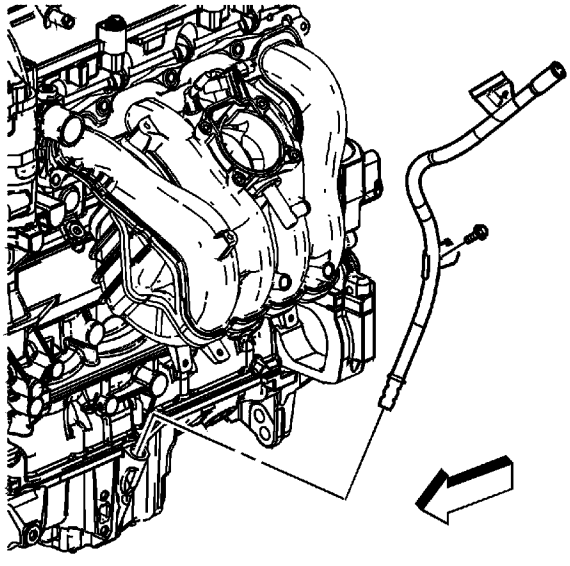

1. Remove knock sensor connector from the oil level indicator tube.
2. Remove the electrical wiring harness from the oil level indicator tube.
3. Remove the oil level indicator tube bracket to the intake manifold bolt.
4. Remove the oil level indicator and the oil level indicator tube from the oil pan.

Exhaust Manifold Removal

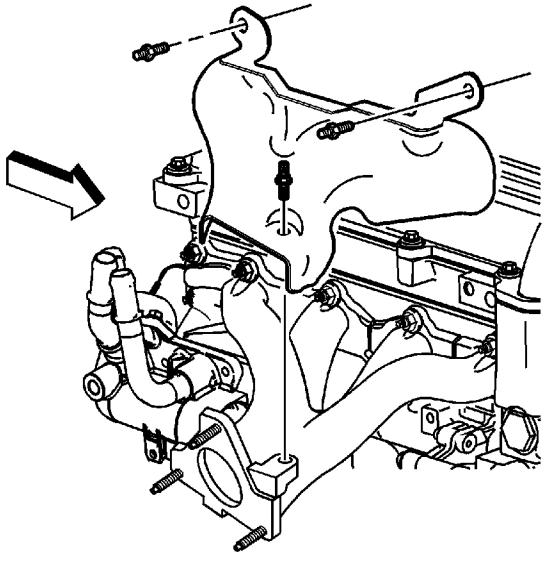

1. Remove the exhaust manifold heat shield.

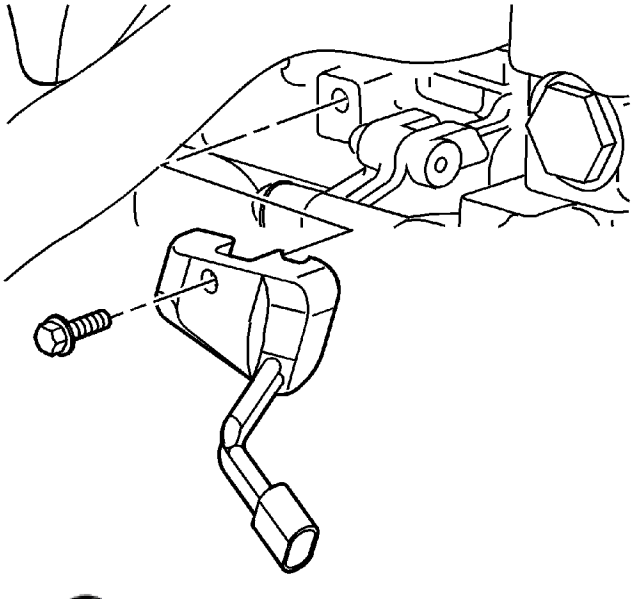

2. Remove the block heater if equipped.

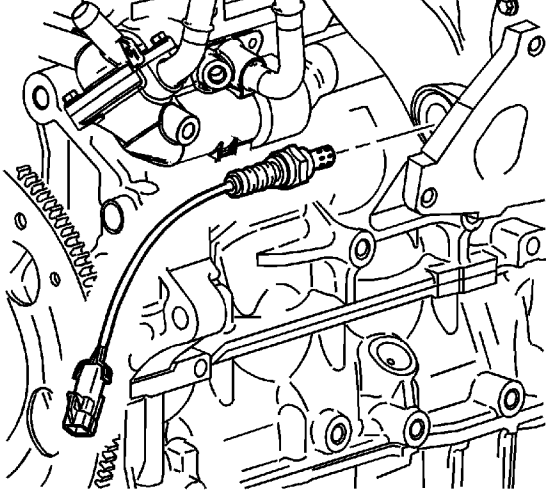

3. Remove the oxygen sensor.

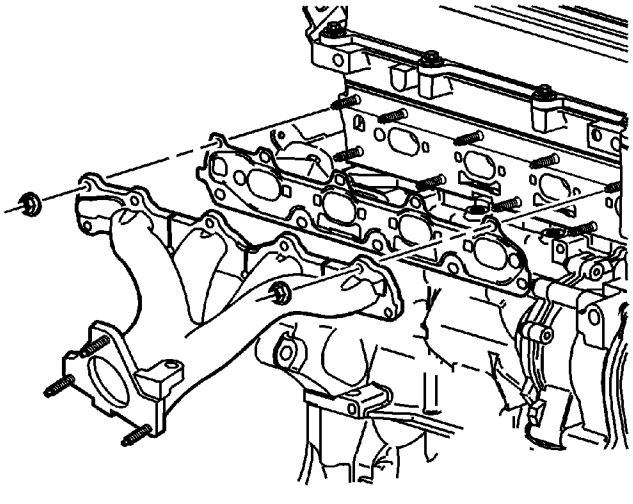

4. Remove and discard the exhaust manifold to cylinder head retaining nuts.
5. Remove the exhaust manifold.
6. Clean all of the sealing surfaces.
7. If the exhaust manifold is being replaced, transfer the following parts:
   - The exhaust manifold heat shield
   - The oxygen sensor

Intake Manifold Removal

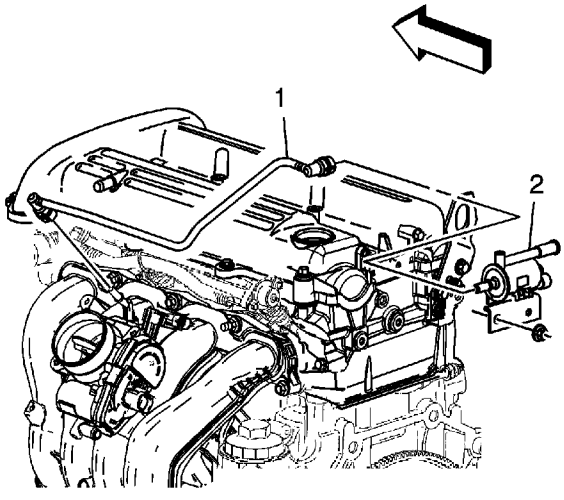

Caution: Never attempt to remove the intake manifold from a hot engine, allow the engine to cool to ambient temperature. The intake manifold is made of a composite plastic and can be damaged if it is removed when the engine is hot.

1. Remove the evaporative emission (EVAP) canister valve tube (1).
2. Remove the EVAP canister valve (2).

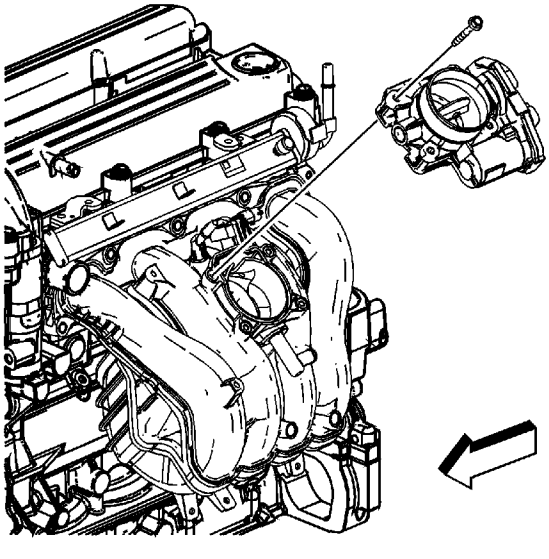

3. Remove the throttle body bolts.
4. Remove the throttle body.

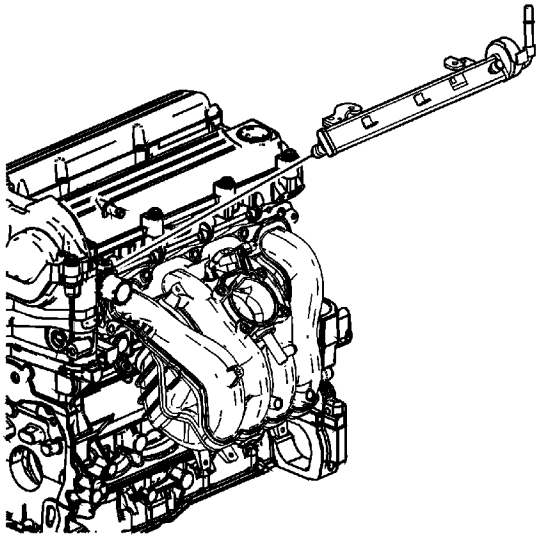

5. Remove fuel pipes and clip. Remove the fuel rail assembly.

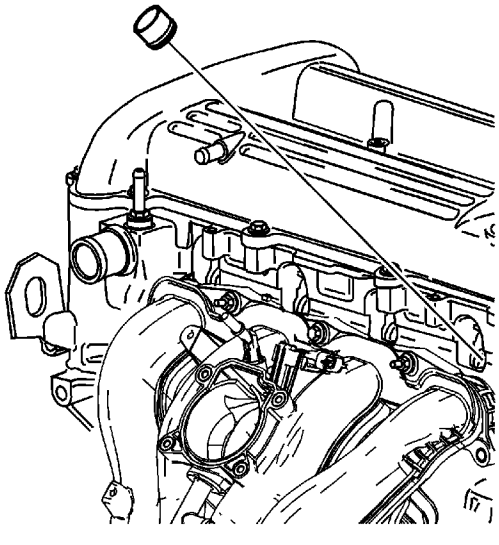

6. Remove the fuel injector tip insulators and discard.

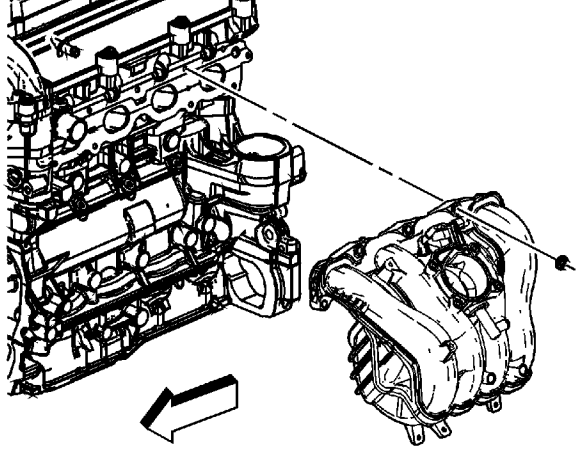

7. Remove the intake manifold retaining nuts and bolts.
8. Remove the intake manifold.
9. Remove the intake manifold gasket, if necessary. The gasket can be used again if it is not damaged.
10. If the intake manifold needs to be replaced, transfer the throttle body to the new intake manifold.

Camshaft Cover Removal

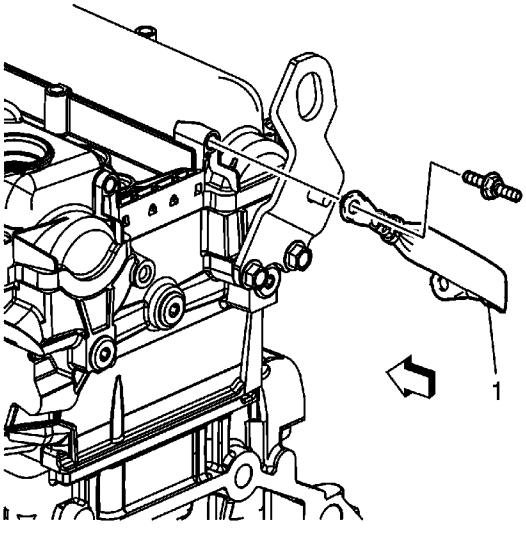

1. Remove the camshaft cover ground strap (1).

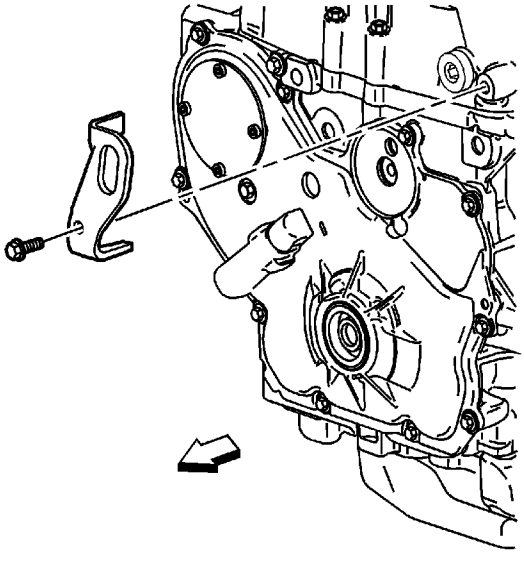

2. Remove the front lift bracket.

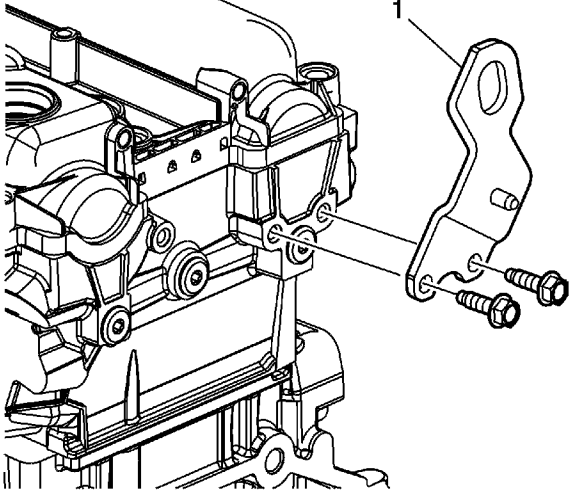

3. Remove the rear lift bracket (1).

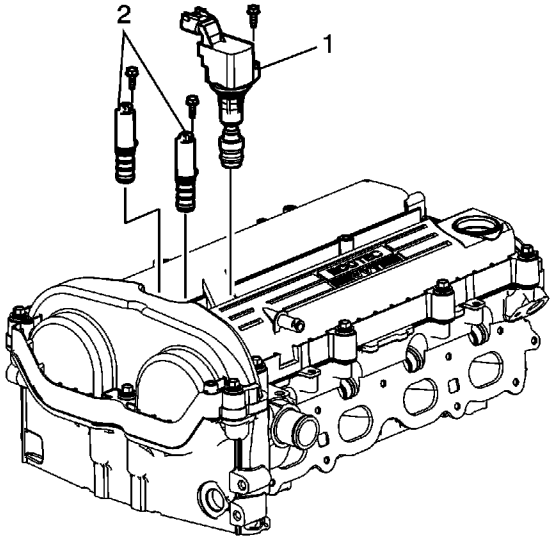

4. Remove the bolt and coil (1).
5. Remove the camshaft position actuator solenoid valve bolts.
6. Remove the camshaft position actuator solenoid valves (2).

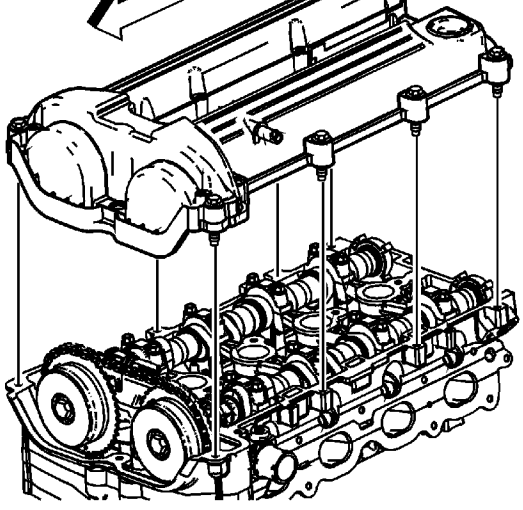

7. Remove the camshaft cover assembly.
8. Remove and discard the camshaft cover gasket, camshaft cover grommets, and camshaft cover bolts if they are serviced with the grommet.

Engine Front Cover and Oil Pump Removal

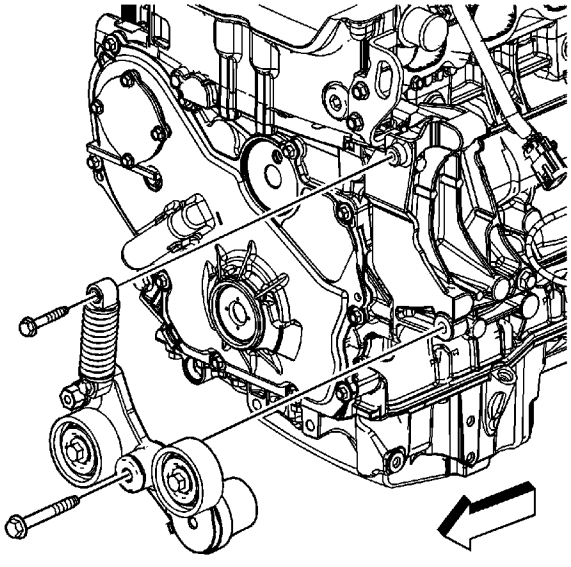

1. Remove the accessory drive belt tensioner bolts.
2. Remove the accessory drive belt tensioner.

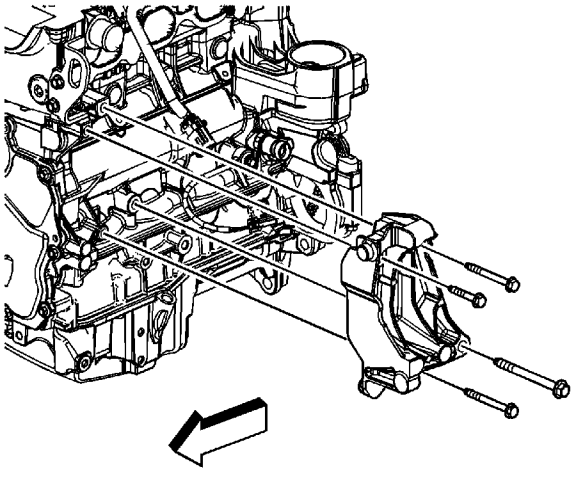

3. Remove the drive belt tensioner bracket bolts.
4. Remove the drive belt tensioner bracket.

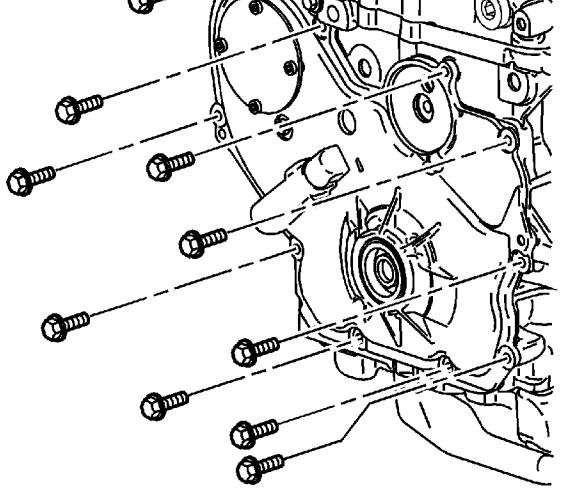

5. Remove the engine front cover bolts.

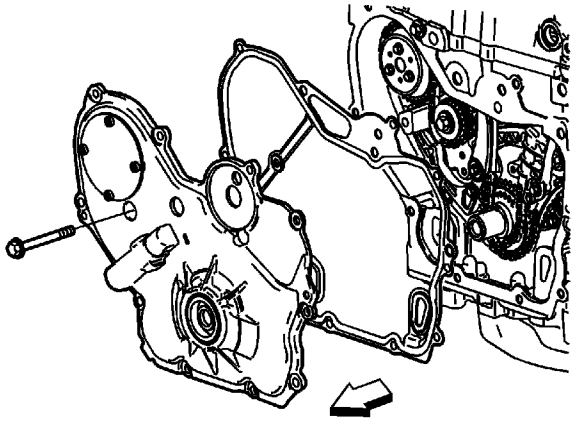

6. Remove the long water pump bolt.
7. Remove the engine front cover and gaskets.
8. Remove the crankshaft front cover oil seal with an appropriate tool.

Timing Chain and Tensioner Removal

Special Tools

EN-48953 Camshaft Actuator Locking Tool

For equivalent regional tools, refer to Special Tools.

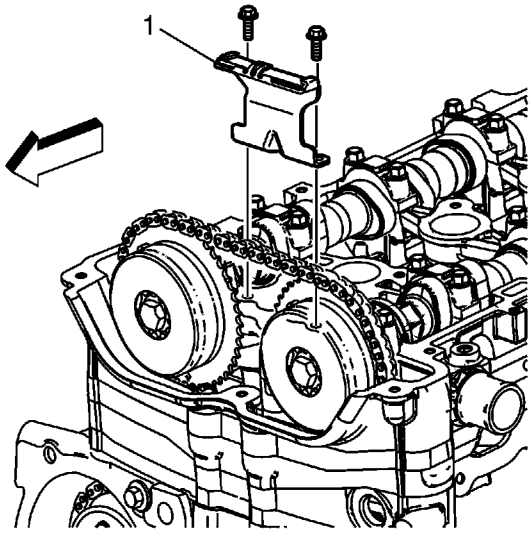

1. Remove the upper timing chain guide bolts.
2. Remove the upper timing chain guide (1).

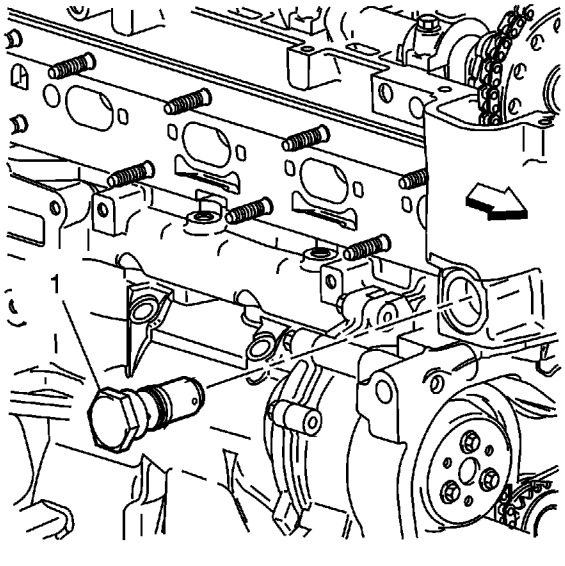

Note: The timing chain tensioner must be removed to unload chain tension before the timing chain is removed.

3. Remove the timing chain tensioner plunger (1).

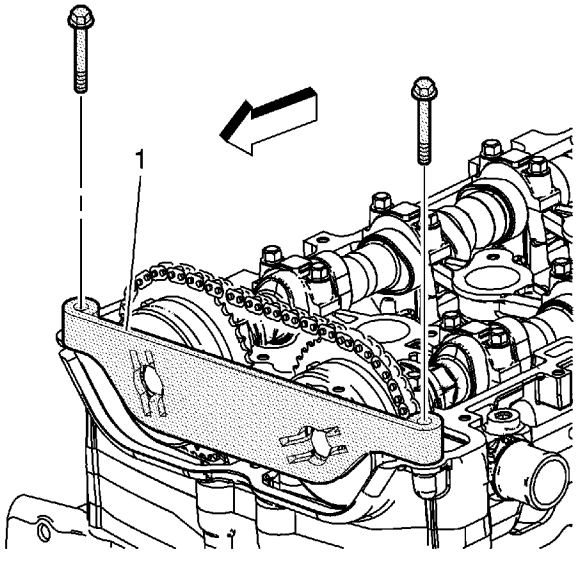

4. Rotate intake camshaft actuators to install *EN-48953* locking tool (1).

Note: Marking the chain and actuators is crucial to procedures operation. The camshaft actuator and timing chain must have oil removed from the surface prior to marking both actuators and chain.

5. Install *EN-48953* locking tool onto the cylinder head and tighten to **10 N·m (89 lb in)**. If the intake camshaft actuator is moving independent of cam and is not locked, rotate the intake camshaft counter-clockwise and the tool will hold the actuator, locking the actuator to the cam.
6. Loosen the intake camshaft actuator bolt.
7. Loosen the exhaust camshaft actuator bolt.
8. Remove *EN-48953* locking tool .

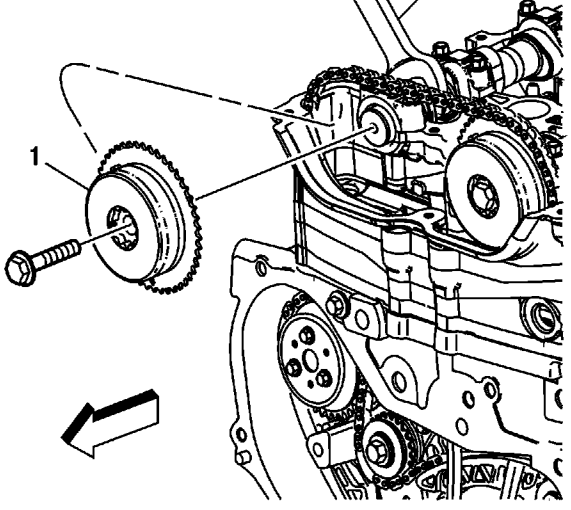

9. Locate hex on the exhaust camshaft and hold with a wrench (2).
10. Remove the exhaust camshaft bolt and the exhaust camshaft actuator (1). Discard the bolt.

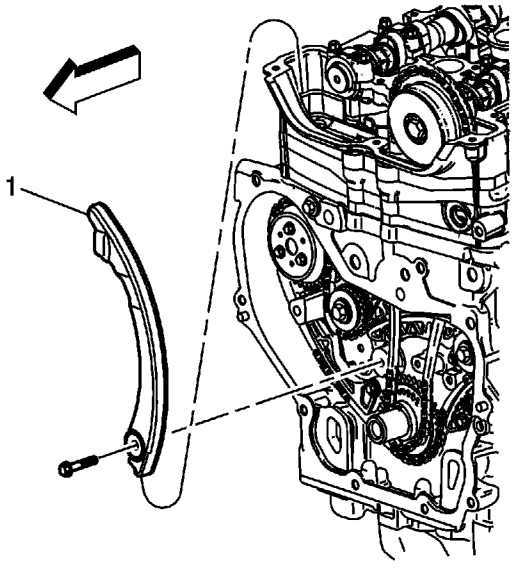

11. Remove the adjustable timing chain guide bolt.
12. Remove the adjustable timing chain guide (1).

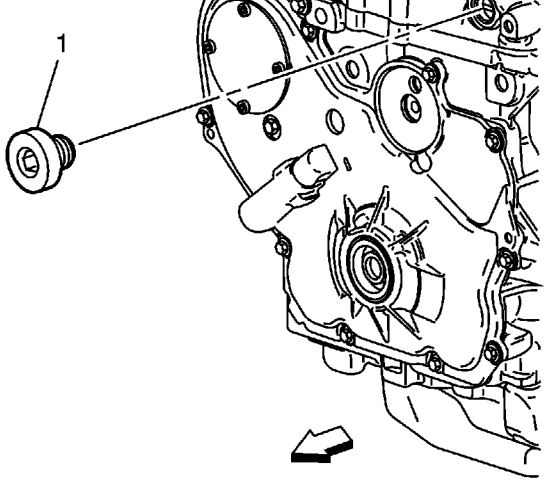

13. Remove the plug (1) to gain access to the fixed timing chain guide bolt.

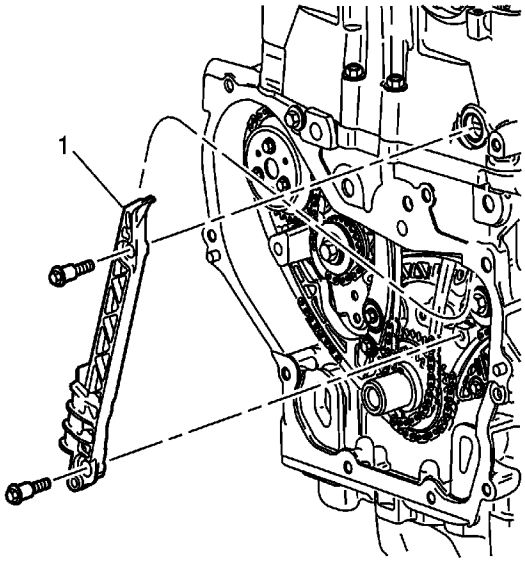

14. Remove the fixed timing chain guide bolts.
15. Remove the fixed timing chain guide (1).

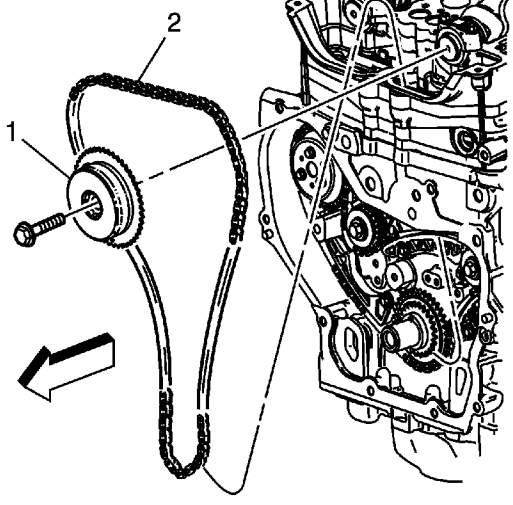

16. Locate hex on the intake camshaft and hold with a wrench.
17. Remove the intake camshaft actuator bolt, the intake camshaft actuator (1) and the timing chain (2) through the top of the cylinder head. Discard the bolt.

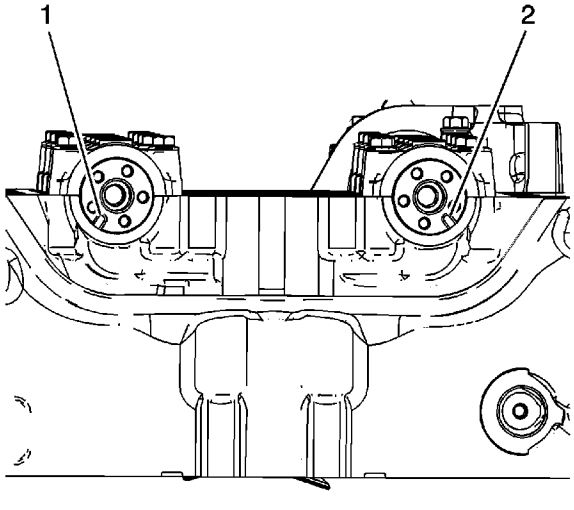

Note: The number 3 exhaust valves are open.

Note: Note the position and direction of the camshafts before removal. Mark the cylinder head in relation to the locking notches before component removal.

18. Mark the cylinder head where the exhaust camshaft actuator locking notch (1) and intake camshaft locking notch (2) are lined up with the cylinder head.

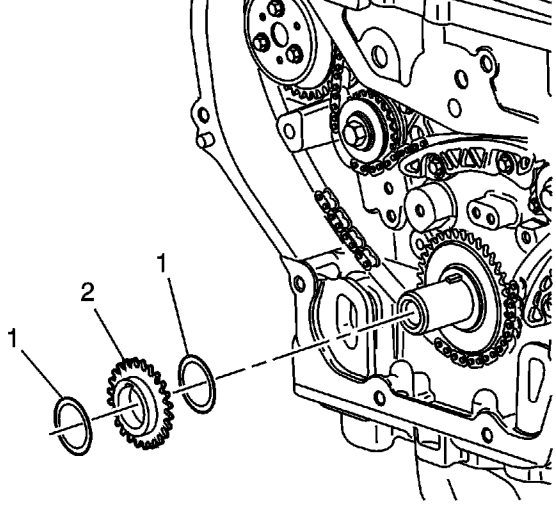

19. Remove the crankshaft sprocket (2) and friction washers (1), if equipped.

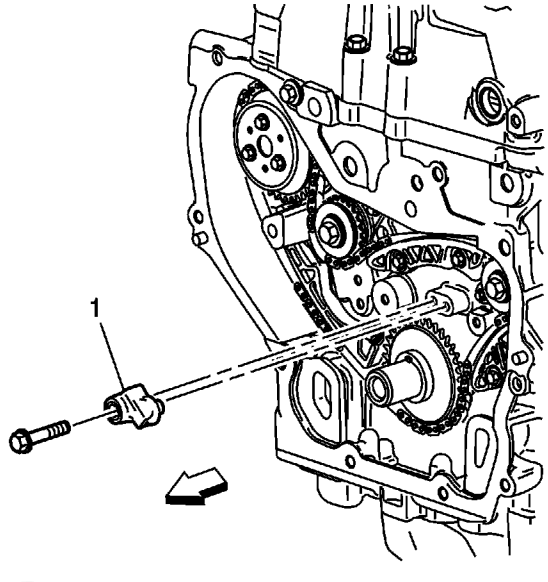

20. Remove the timing chain oil nozzle bolt.
21. Remove the timing chain oil nozzle (1).

Intake and Exhaust Camshaft, Bearing Cap, and Lash Adjuster Removal

Intake Camshaft Removal

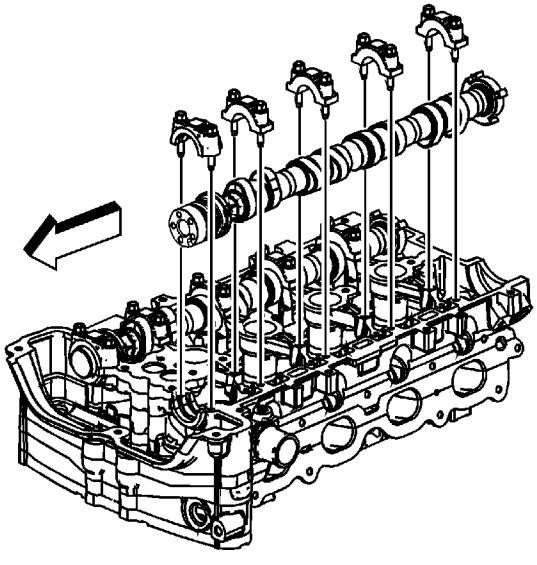

Note: Remove each bolt on each cap one turn at a time until there is no spring tension pushing on the camshaft.

1. Mark camshaft caps to ensure they are installed in the same position.
2. Remove the intake camshaft cap bolts.
3. Remove the camshaft caps.
4. Remove the intake camshaft.

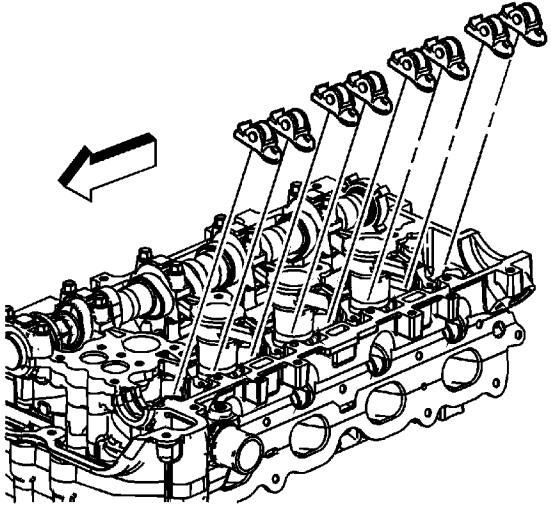

Note: Keep all of the roller finger followers and hydraulic lash adjusters in order so that they can be reinstalled in their respective locations.

5. Remove the intake camshaft roller finger followers.

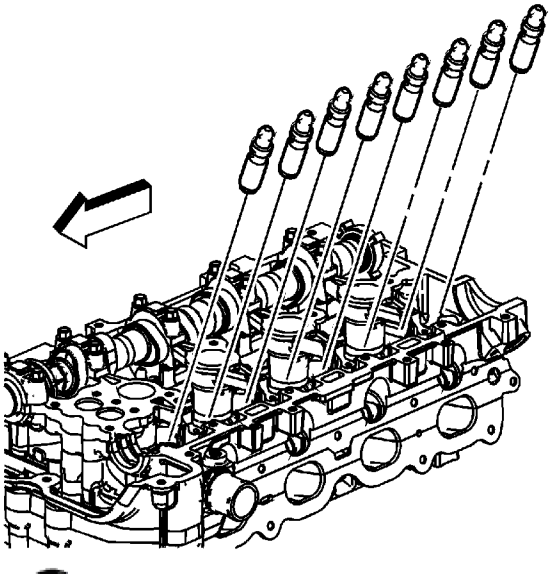

6. Remove the hydraulic lash adjusters.

Exhaust Camshaft Removal

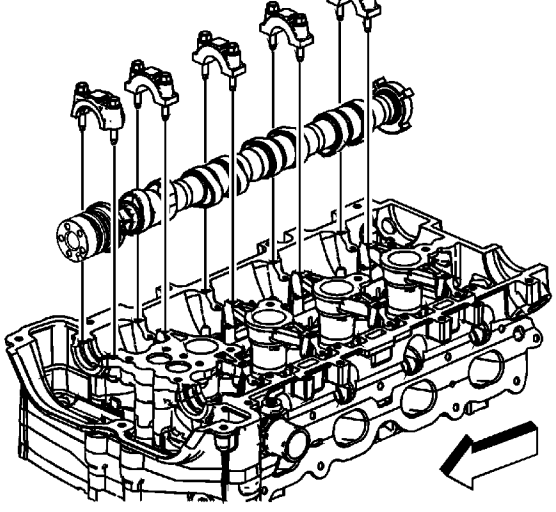

Note: Remove each bolt on each cap one turn at a time until there is no spring tension pushing on the camshaft.

1. Mark camshaft caps to ensure they are installed in the same position.
2. Remove the exhaust camshaft cap bolts.
3. Remove the camshaft caps ensuring they are marked and refitted in same position on assembly.
4. Remove the exhaust camshaft.

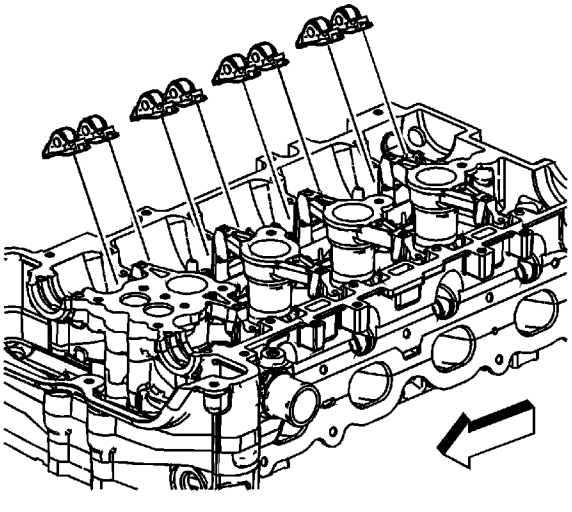

Note: Keep all of the roller finger followers and hydraulic lash adjusters in order so that they can be reinstalled in their respective locations.

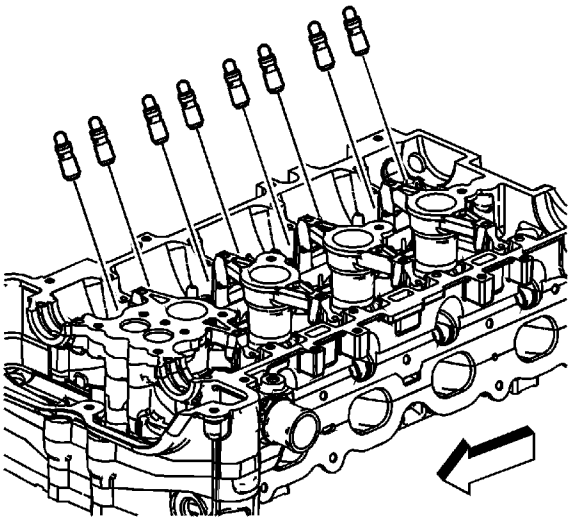

6. Remove the hydraulic lash adjusters.

Water Pump and Balance Shaft Chain and Tensioner Removal

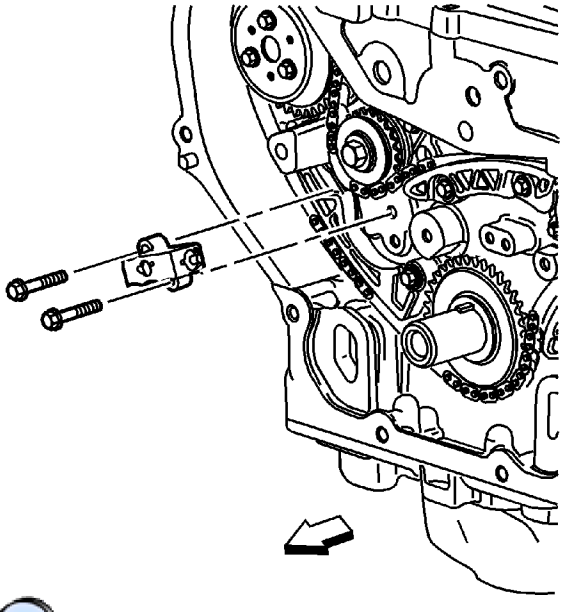

1. Remove the balance shaft drive chain tensioner bolts.
2. Remove the balance shaft drive chain tensioner.

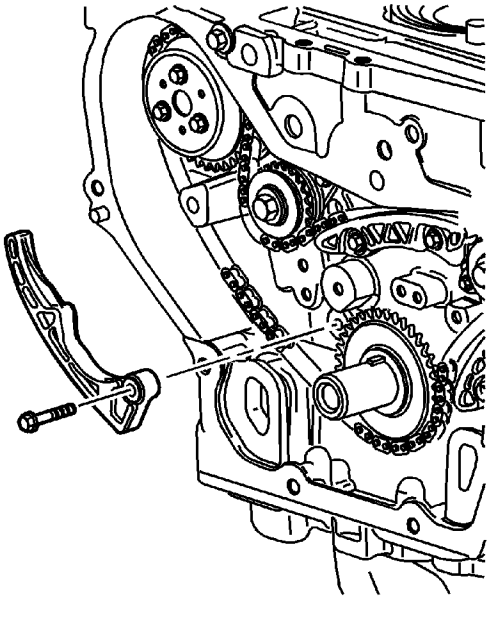

3. Remove the adjustable balance shaft chain guide bolt.
4. Remove the adjustable balance shaft chain guide.

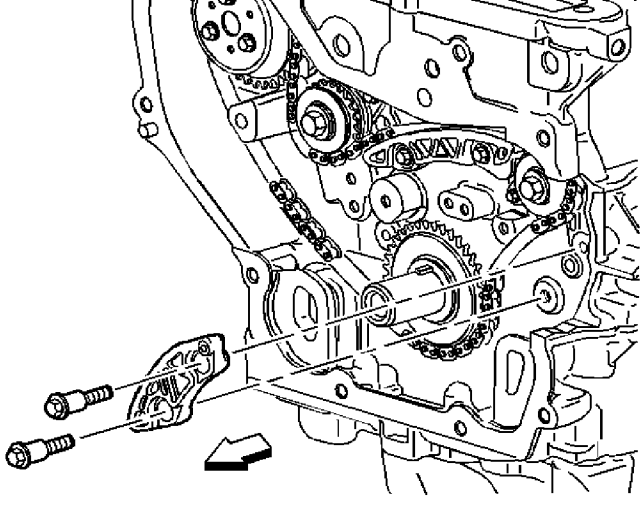

5. Remove the small balance shaft drive chain guide bolts.
6. Remove the small balance shaft drive chain guide.

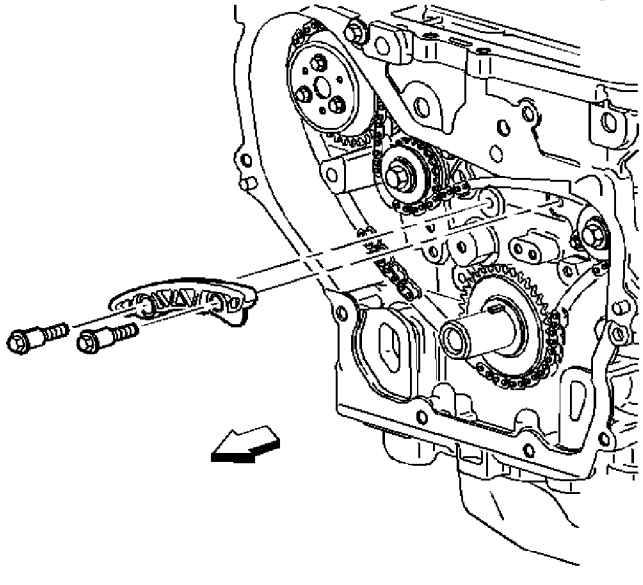

7. Remove the upper balance shaft drive chain guide bolts.
8. Remove the upper balance shaft drive chain guide.

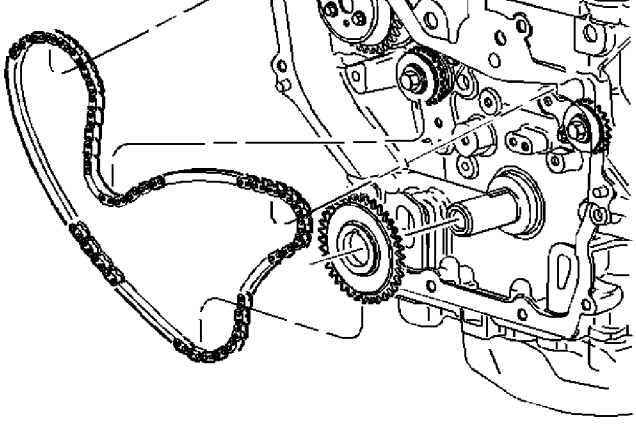

Important: It may ease removal of the balance shaft drive chain to get all of the slack in the chain between the crankshaft and water pump sprockets.

9. Remove the balance shaft drive chain.
10. Remove the balance shaft drive sprocket.

Balance Shaft Removal

Special Tools

EN-43650 Balancer Shaft Bearing Remover and Installer

For equivalent regional tools, refer to Special Tools.

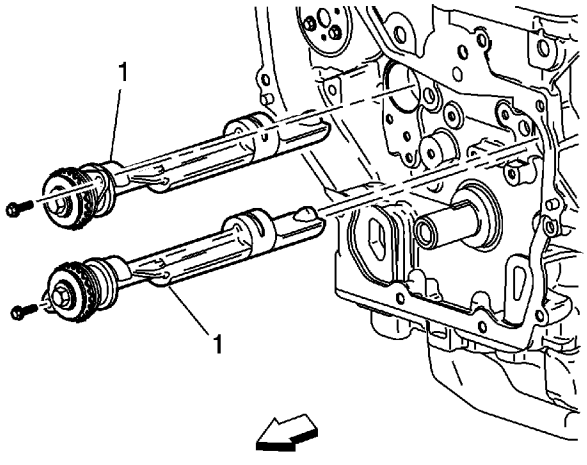

1. Remove the balance shaft bearing carrier bolts.

   Note:
   - It is possible to install the intake side balance shaft into the exhaust side and vice versa. Please use care not to install the balance shafts into the wrong bores. Engine vibration will result.
   - Do not remove the bolt holding the sprocket.

2. Remove the balance shaft assemblies (1).

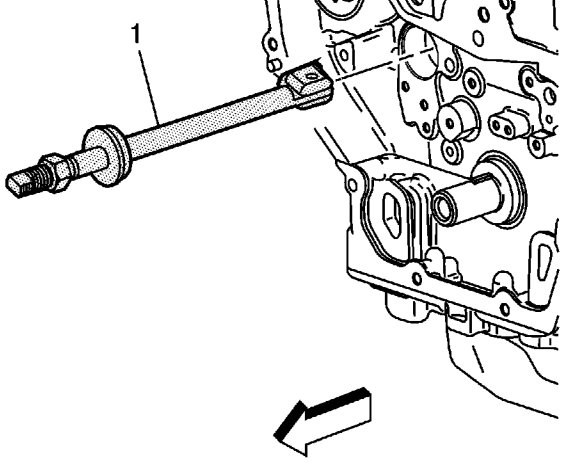

Caution: Proper centering of the tool is required on the balance shaft bushing. If the tool is not properly centered then damage to the bearing bore and block will occur.

3. Install the *EN-43650* remover (1) into the balance shaft hole. Insert the tool with the foot parallel to the shaft.

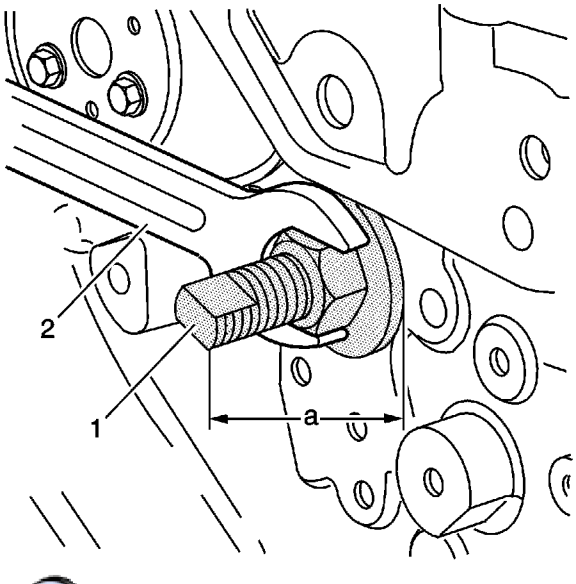

4. When the *EN-43650* remover (1) is inserted in the block turn the *EN-43650* remover so that the foot becomes perpendicular to the shaft.
5. Center the foot of the *EN-43650* remover on the balance shaft bushing.
6. Once the *EN-43650* remover is centered on the balance shaft bushing, then insert the centering guide into the front balance shaft bore and tighten the nut with an appropriate wrench (2).

If the *EN-43650* remover is less than approximately 114 mm (4.5 in) (a), recheck the tool alignment.

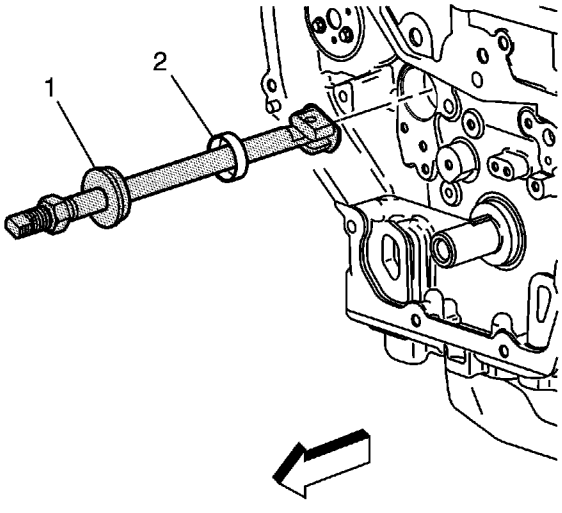

7. Tighten the nut on the *EN-43650* remover (1) until the tension releases. When the tension releases, remove the *EN-43650* remover and the balance shaft bushing (2).

Water Pump Removal

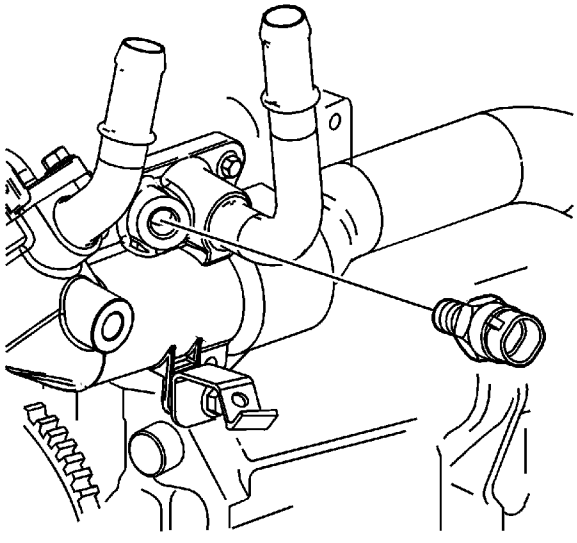

1. Remove the engine coolant temperature sensor.

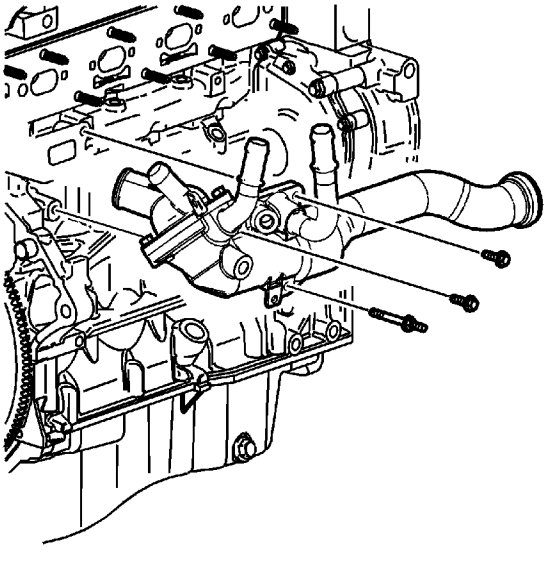

2. Remove the thermostat and water feed pipe retaining bolts.

   Important: Twist the water feed pipe while pulling to remove it from the water pump cover.

3. Remove the thermostat housing and water feed pipe from the water pump cover.

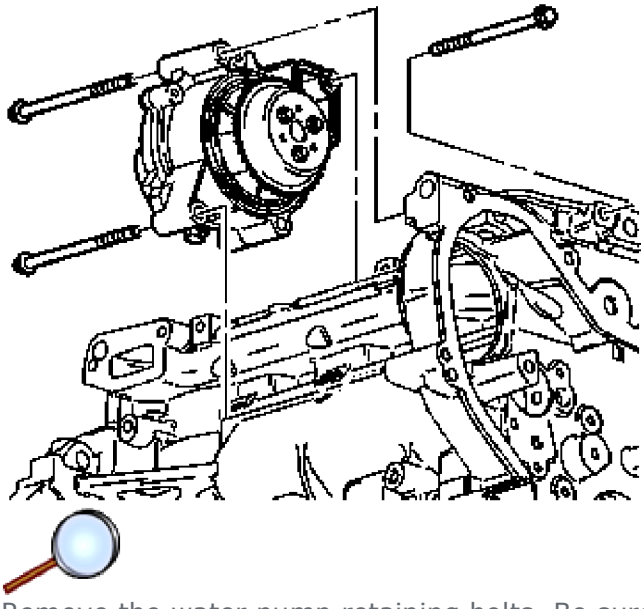

4. Remove the water pump retaining bolts. Be sure to remove the bolt that goes through the front of the engine block.
5. Remove the water pump assembly.

Cylinder Head Removal

Special Tools

EN-38188 Cylinder Head Broken Bolt Extractor Kit

For equivalent regional tools, refer to Special Tools.

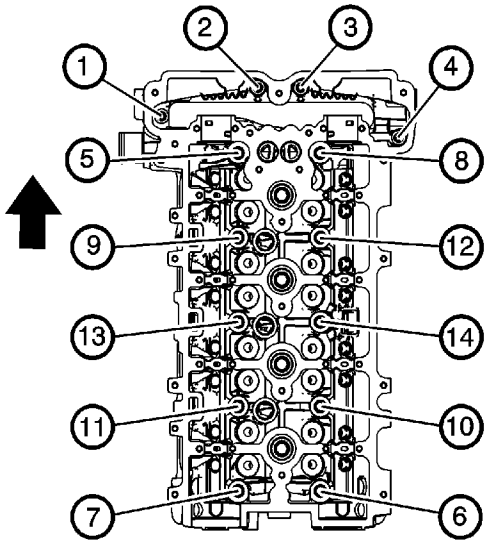

1. Remove the cylinder head to the block bolts in sequence.

   Discard the bolts.

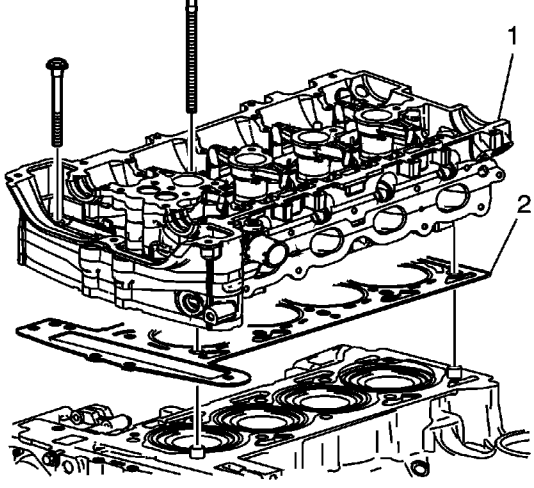

2. Remove the cylinder head (1).
3. Remove the cylinder head gasket (2).
4. Clean all of the gasket surfaces.
5. Use the following procedures when cleaning the cylinder head and cylinder block surfaces:
   - Use a razor blade gasket scraper to clean the cylinder head and cylinder block gasket surfaces. Do not scratch or gouge any surface.

     Note: Do not use any other method or technique to clean these gasket surfaces.

   - Use a new razor blade for each cylinder head and cylinder block.

     Note: Be careful not to gouge or scratch the gasket surfaces. Do not gouge or scrape the combustion chamber surfaces. The feel of the gasket surface is important, not the appearance. There will be indentations from the gasket left in the cylinder head after all of the gasket material is removed. These small indentations will be filled in by the new gasket.

   - Hold the razor blade as parallel to the gasket surface as possible.

   Note: Do not use a tap to clean the cylinder head bolt holes.

6. Clean the old sealer/lube and dirt from the bolt holes.
7. Clean the bolt holes with a nylon bristle brush.

   Warning: Wear safety glasses to avoid injury when using compressed air or any cleaning solvent. Bodily injury may occur if fumes are inhaled or if skin is exposed to chemicals.

8. When cleaning the cylinder head bolt holes use a suitable commercial spray liquid solvent and compressed air from an extended-tip blow gun to reach the bottom of the holes.
9. Remove any broken long cylinder head bolts using the *EN-38188* extractor kit .

Oil Pan Removal

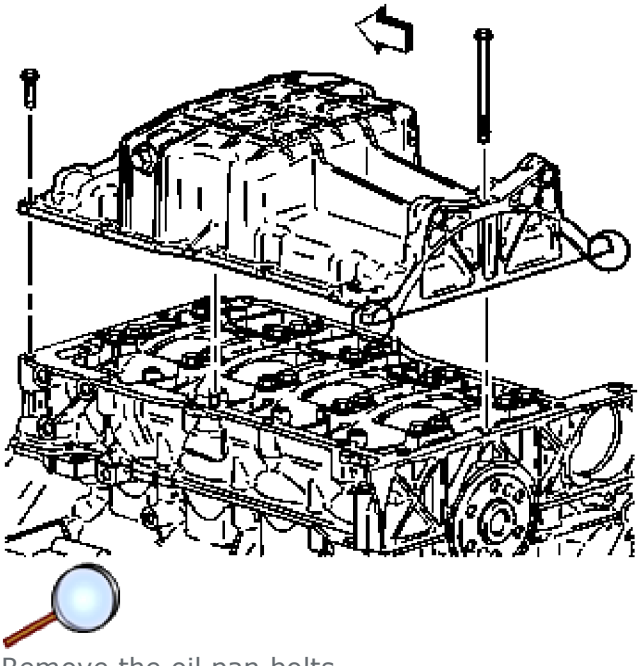

1. Remove the oil pan bolts.
2. Remove the oil pan at pry points.

Piston, Connecting Rod, and Bearing Removal

Tools Required

J-43966-1 Connecting Rod Guides

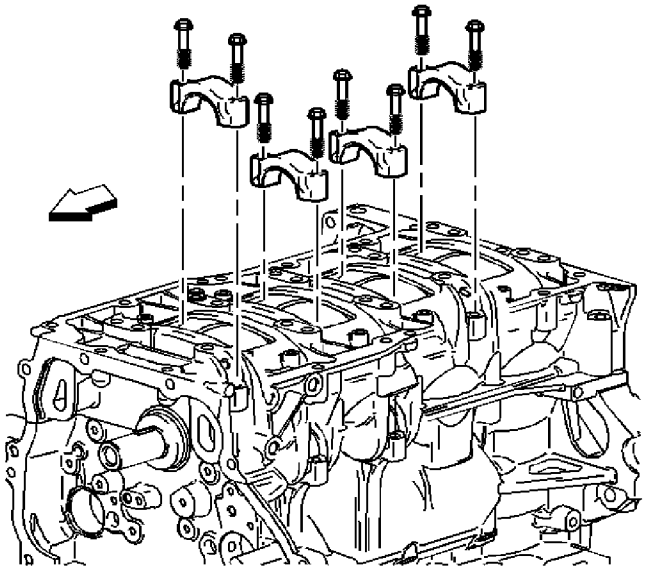

1. Rotate the crankshaft to a position where the connecting rod bolts are the most accessible.
2. Mark the connecting rod and cap with the cylinder position. Also mark their orientation. This will ensure the caps and connecting rods are re-assembled properly.
3. Remove any ridge at the top of the cylinder bore to avoid damage to the piston ring lands.
4. Remove the connecting rod bolts.
5. Remove the connecting rod cap.

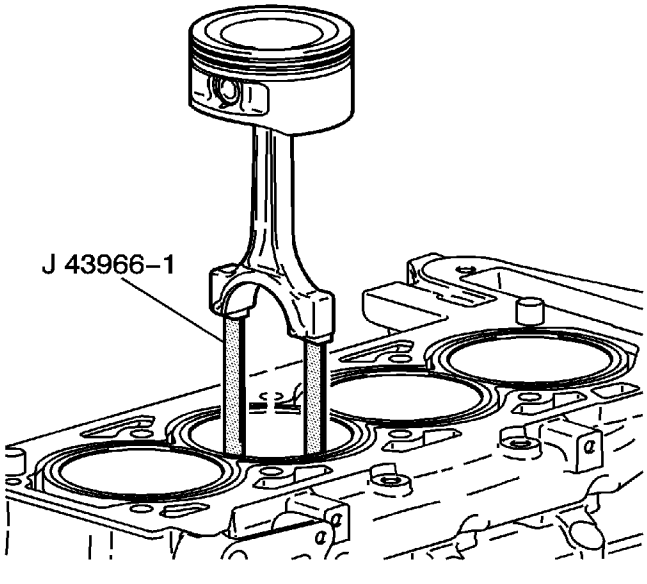

6. Install J-43966-1 on the connecting rod bolts before removing the piston and connecting rod assembly.
7. Remove the piston and connecting rod assembly.

Lower Crankcase Removal

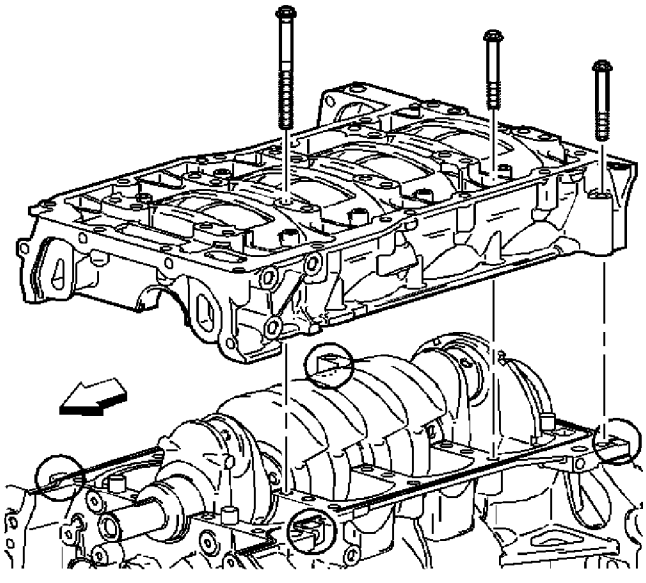

1. Remove the crankshaft position sensor.
2. Inspect the crankshaft position sensor for damage and replace, if necessary.
3. Remove the bedplate perimeter bolts.

   Important: Do not forget the 2 outside rear bolts.

4. Remove and discard the crankshaft bearing bolts.
5. Using the pry-points and an appropriate prying tool, gently separate the upper and lower crankcase.

Crankshaft and Bearing Removal

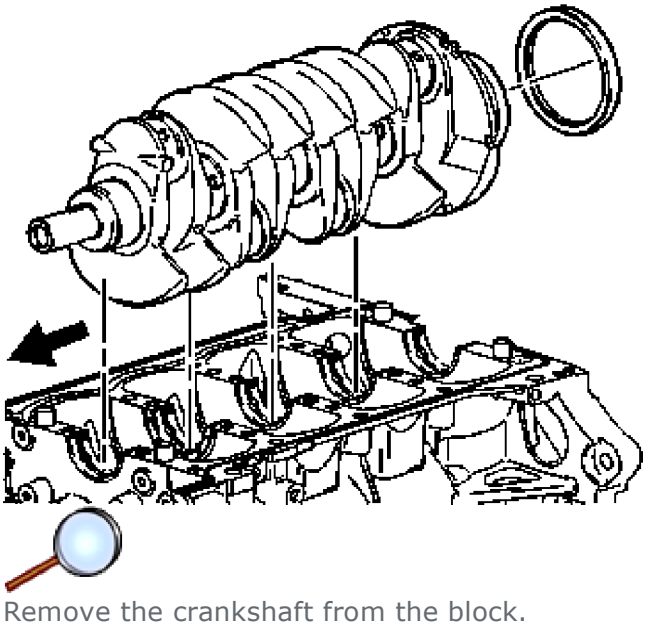

1. Remove the crankshaft from the block.
2. Remove the crankshaft rear oil seal from the block.

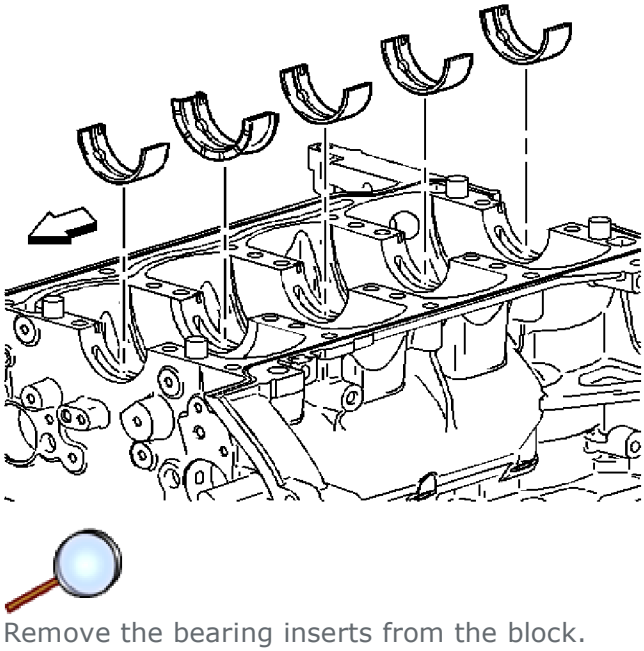

3. Remove the bearing inserts from the block.

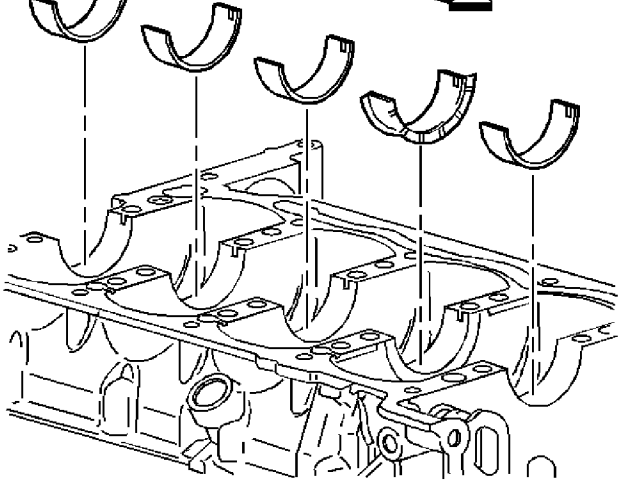

4. Remove the bearing inserts from the bed plate.
5. Clean the oil, sludge, and carbon.
6. Inspect the oil passages for obstructions.
7. Inspect the threads.
8. Inspect the bearing journals and the thrust surfaces for the following conditions:
   - Cracks
   - Chips
   - Gouges
   - Roughness
   - Grooves
   - Overheating (discoloration)
9. Inspect the corresponding bearing inserts for imbedded foreign material. If foreign material exists find the cause and repair it.

   Important: Replace the crankshaft if cracks, severe gouges or burned spots are found. Slight roughness may be removed with a fine polishing cloth soaked in clean engine oil. Burrs may be removed with a fine oil stone.

10. Measure the crankshaft journals. Use a micrometer or dial indicator to measure the taper and runout. Note the result for the later selection of bearing inserts. If not within limits the crankshaft must be replaced.

    Note the location of the main bearing high spots. If they are not in line, the crankshaft is bent and must be replaced.

Engine Block Disassemble

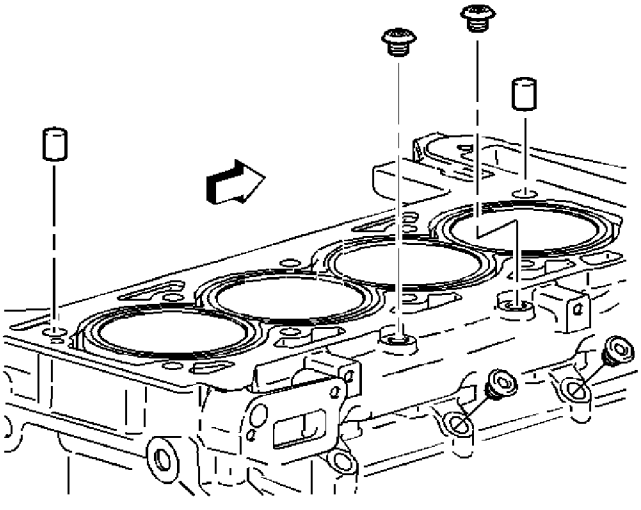

1. Remove the engine block coolant drain plug.
2. Remove the rear oil passage plug.
3. Remove the 6 oil passage plugs on the sides of the block.
4. Remove the 2 water passage plugs on the top of the block.
5. Remove the 2 front oil passage plugs.

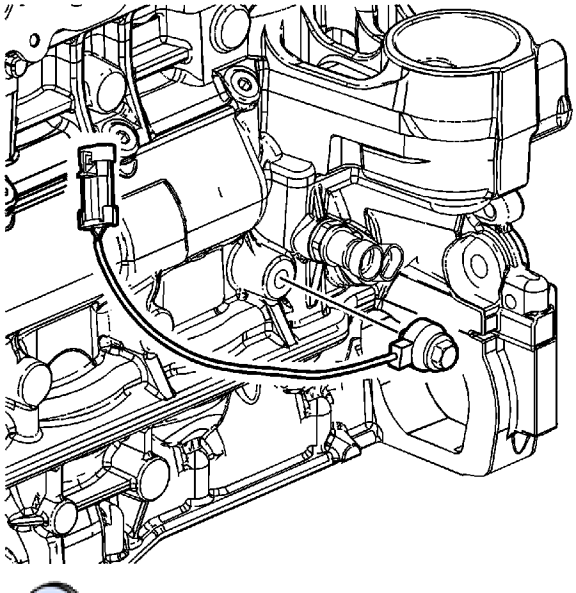

6. Remove the knock sensor and bolt.

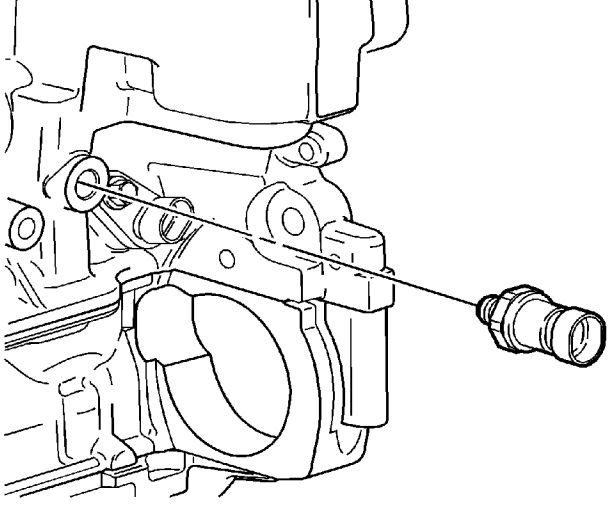

7. Remove the oil pressure switch.

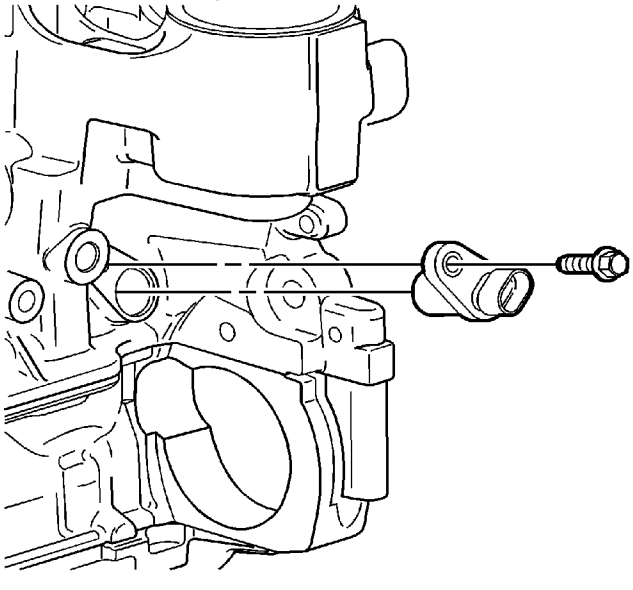

8. Remove the crankshaft position (CKP) sensor and bolt.

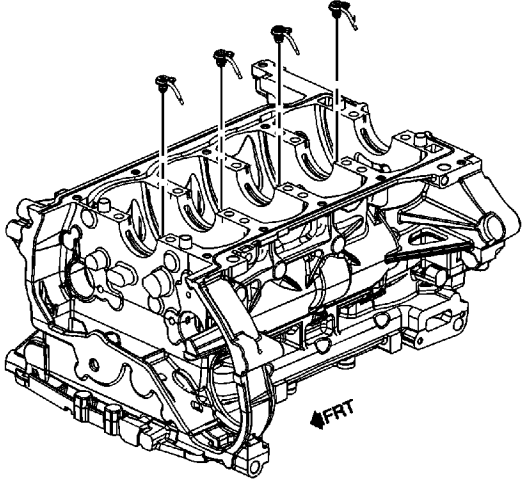

9. If equipped, loosen the piston oil nozzle assembly bolt and remove the piston oil nozzle assembly.

Engine Block Cleaning and Inspection

Special Tools

- *J 7872* Magnetic Base Dial Indicator
- *J 8087* Cylinder Bore Gage

For equivalent regional tools, refer to Special Tools.

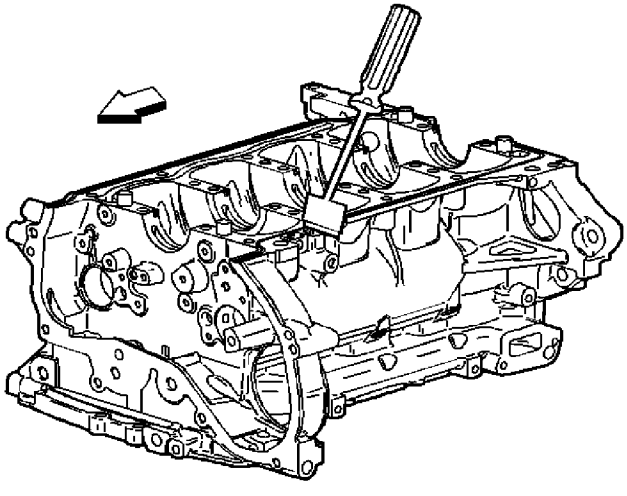

1. Clean the sealing material from the gasket mating surfaces.
2. Clean the engine block and lower crankcase in a cleaning tank with solvent appropriate for aluminum.
3. Flush the engine block with clean water or steam.
4. Clean the oil passages.
5. Clean the blind holes.
6. Spray the cylinder bores and the machined surfaces with engine oil.
7. Inspect the threaded holes. Clean the threaded holes with a rifle brush. If necessary, drill out the holes and install thread inserts. Refer to Thread Repair.

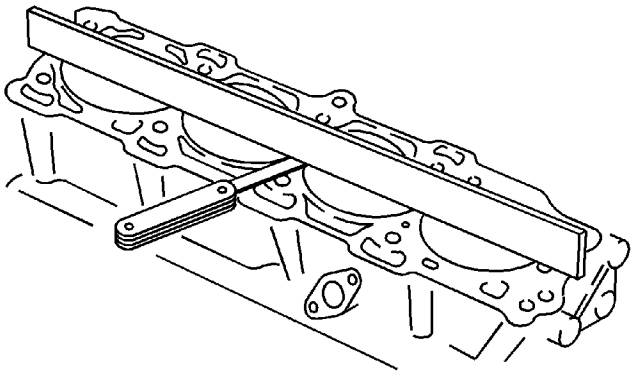

8. Refer to Engine Mechanical Specifications. If the deck surface is out of specification, replace the block. Do not machine the block.
9. Inspect the oil pan rail for nicks. Inspect the front cover attaching area for nicks. Use a flat mill file to remove any nicks.

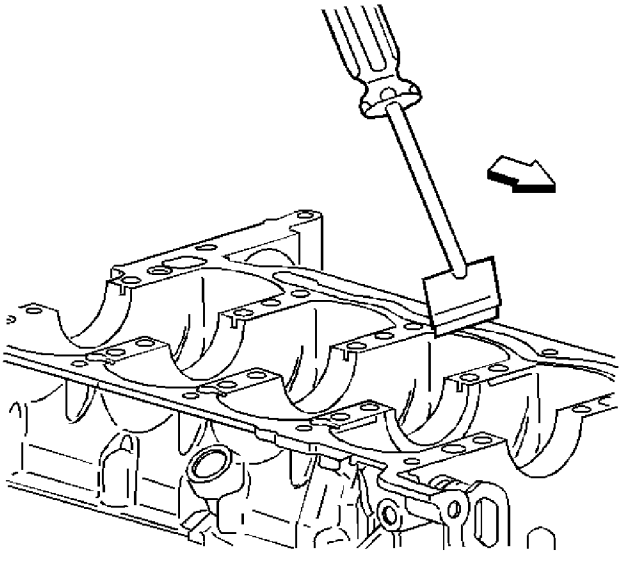

10. Clean the sealing material from the gasket mating surfaces on the lower crankcase engine block side.

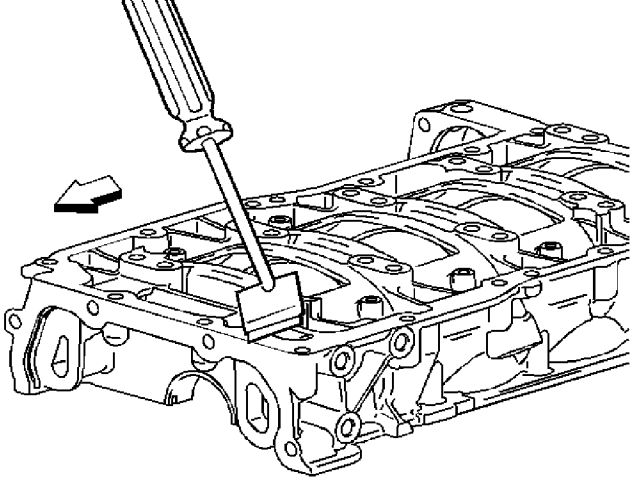

11. Clean the sealing material from the gasket mating surfaces on the lower crankcase oil pan side.

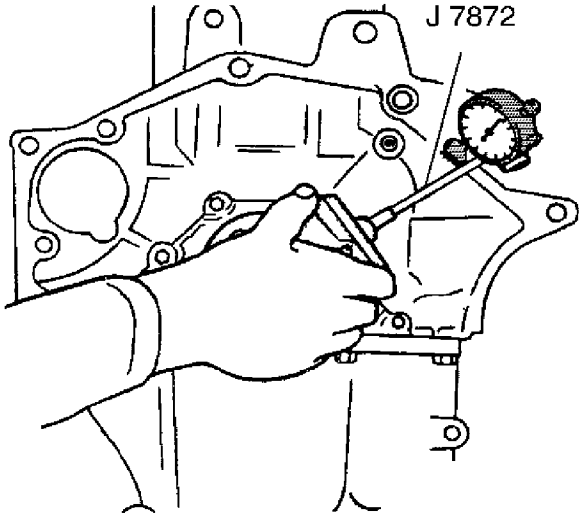

12. Inspect the mating surfaces of the transmission face.

Caution: A broken flywheel may result if the transmission case mating surface is not flat.

13. Use the following procedure in order to measure the engine block flange runout at the mounting bolt hole bosses:
    13.1. Temporarily install the crankshaft. Measure the crankshaft flange runout using the *J 7872* dial indicator
    13.2. Hold the gage plate flat against the crankshaft flange.
    13.3. Place the dial indicator stem on the transmission mounting bolt hole boss. Set the

13.4. Record the readings obtained from all of the bolt hole bosses. The measurements should not vary more than 0.203 mm (0.008 in).

13.5. Recheck the crankshaft flange runout if the readings vary more than 0.203 mm (0.008 in).

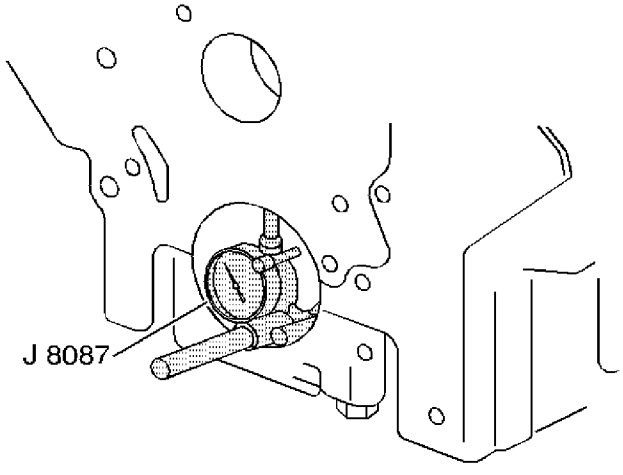

14. Inspect the crankshaft main bearing bores. Use the *J 8087* gage to measure the bearing bore concentricity and alignment. Refer to Engine Mechanical Specifications.
15. Replace the engine block and bed plate if the crankshaft bearing bores are out of specification.

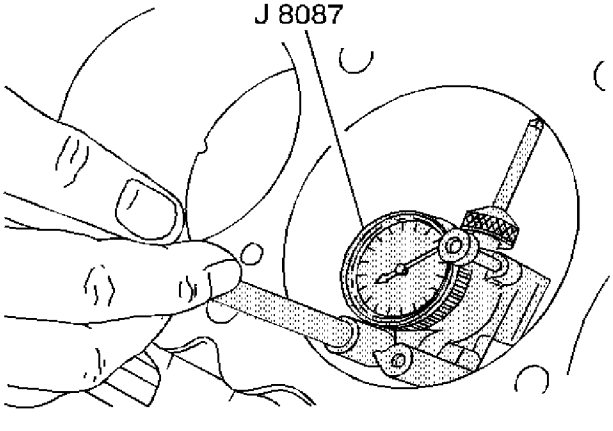

16. Inspect the cylinder bores using the *J 8087* gage . Inspect for the following items:
    - Wear

- Runout
- Ridging

17. If the cylinder bores are out of specification, replace the block. Refer to Engine Mechanical Specifications.

Cylinder Honing

Tools Required

J 8087 Cylinder Bore Gage

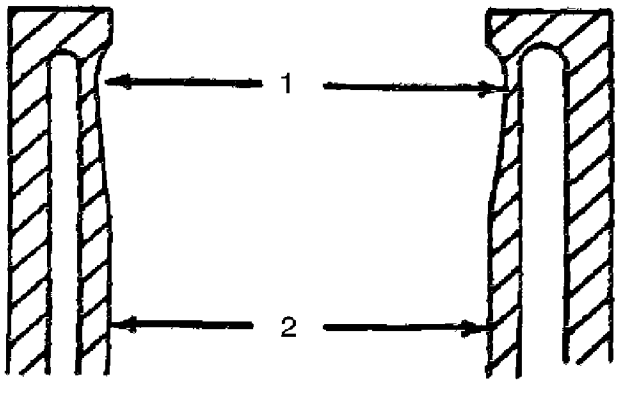

1. Measure the cylinder bore for out-of-round and taper.
2. Measure dimension (1) at 13 mm (½ in) below the head gasket surface. Measure dimension (2) at 100 mm (4 in) below the head gasket surface.

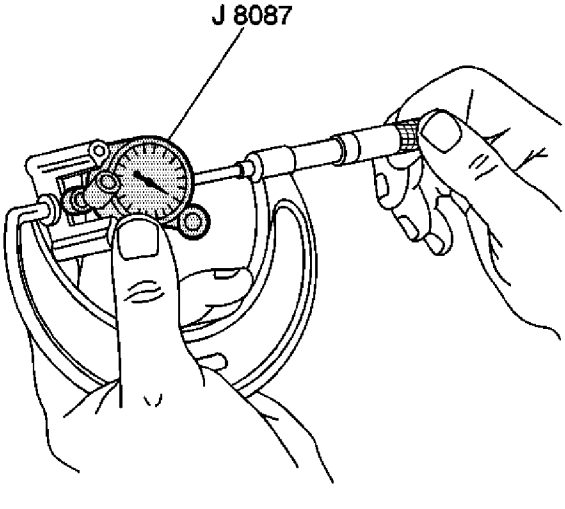

cylinder. Measure across the gage contact points with an outside micrometer, with the gage at the same zero setting as when the gage was removed from the cylinder.

4. Fine vertical scratches made by the ring ends do not, by themselves, cause excessive oil consumption. Do not hone the cylinder in order to remove these scratches.
5. If the bore is glazed but otherwise serviceable, lightly break the glaze with a hone. Replace the piston rings. Refer to Piston, Connecting Rod, and Bearing Installation .
   - The honing stones must be clean, sharp, and straight.
   - Move the hone slowly up and down to produce a 45 degree cross-hatch pattern.
   - Clean the bore thoroughly with soap and water.
   - Dry the bore.
   - Rub clean engine oil in the bore.
   - Remeasure the bore.
6. If the cylinder bore is out of specification, replace the block.
7. If honing is not required, clean the cylinder bores with hot water and detergent. Apply clean engine oil to the bore after washing and drying the bore.

Crankshaft Balancer Cleaning and Inspection

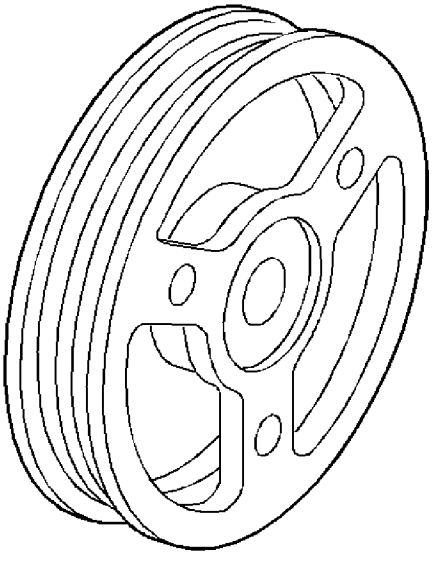

1. Clean the crankshaft balancer.
2. Clean the belt grooves of all dirt or debris with a wire brush.

   Warning: Refer to Safety Glasses Warning in the Preface section.

3. Dry the crankshaft balancer with compressed air.
4. Inspect the crankshaft balancer for the following:
   - Worn, grooved, or damaged hub seal surface

     A crankshaft balancer hub seal surface with excessive scoring, grooves, rust or other damage must be replaced.

     Note: In order for the belt to track properly, the belt grooves should be free of all dirt or debris.

   - Dirty or damaged belt grooves

     The balancer belt grooves should be free of any nicks, gouges, or other damage that may not allow the belt to track properly.

     Minor imperfections may be removed with a fine file.

   - Worn, chunking or deteriorated rubber between the hub and pulley

Engine Flywheel Cleaning and Inspection

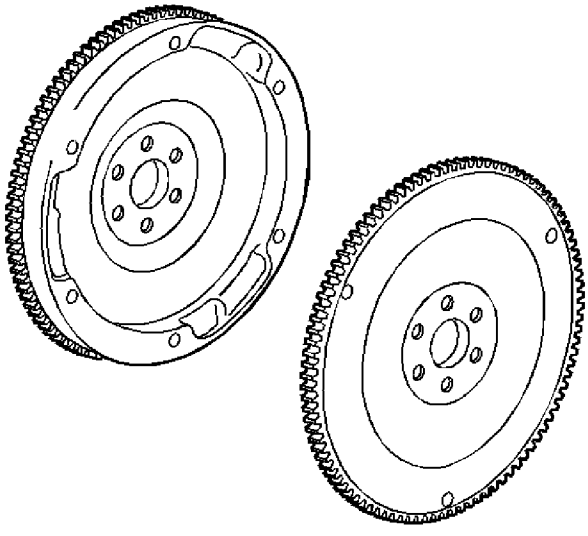

Note: In order to maintain the proper component balance, contact surface taper, and heat transfer, manual transmission flywheels are NOT to be machined.

1. Clean the flywheel in solvent.

   Warning: Refer to Safety Glasses Warning in the Preface section.

2. Dry the flywheel with compressed air.

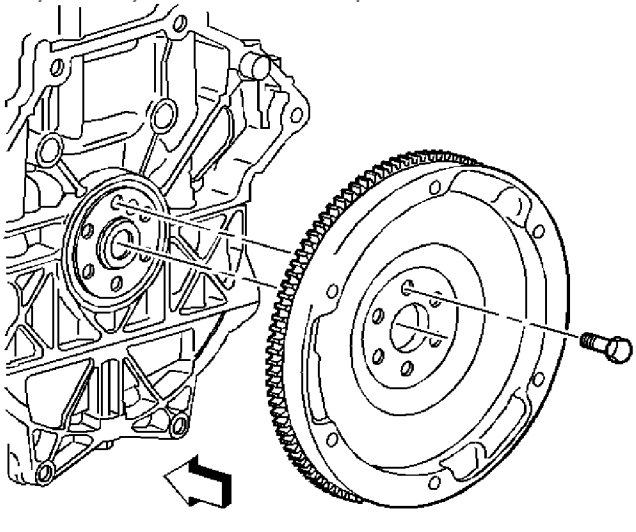

3. Inspect the manual transmission flywheel for the following:
   - Damaged ring gear teeth
   - Loose or improperly positioned ring gear

     The ring gear has an interference fit onto the flywheel and should be positioned completely against the flange of the flywheel.
   - A scored, grooved or damaged friction surface

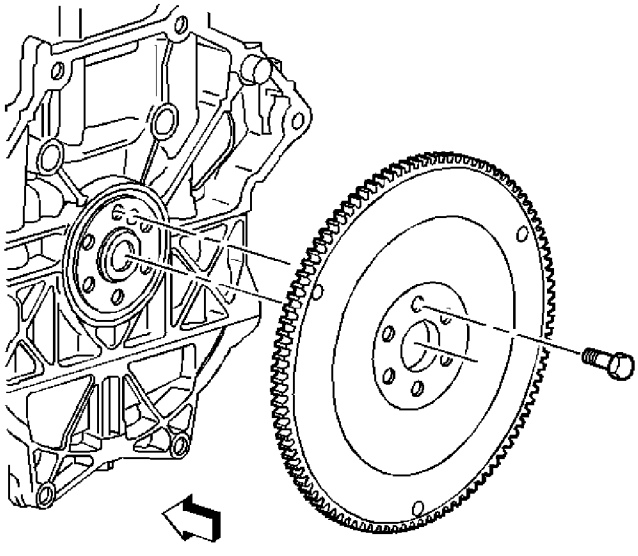

4. Inspect the automatic transmission flywheel for the following:
   - Damaged ring gear teeth
   - Stress cracks around the flywheel-to-crankshaft bolt hole locations
   - Weight saving holes

Crankshaft and Bearing Cleaning and Inspection

Special Tools

EN-7872 Magnetic Base Dial Indicator Set

For equivalent regional tools, refer to Special Tools.

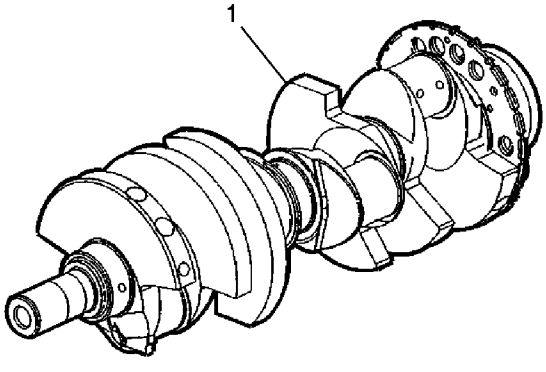

Note: Use care when handling the crankshaft. Avoid damage to the bearing surfaces or the lobes of the crankshaft position reluctor ring. Damage to the teeth of the crankshaft position reluctor ring may affect on-board diagnostic (OBD) II system performance.

1. Clean the crankshaft (1) with solvent.
2. Thoroughly clean all oil passages and inspect for restrictions or burrs.

   Warning: Refer to Safety Glasses Warning in the Preface section.

3. Dry the crankshaft with compressed air.

   Note: Reluctor ring teeth should not have imperfections on the rising or falling edges.

   Imperfections of the reluctor ring teeth may effect OBD II system performance.

4. Perform a visual inspection of the crankshaft for damage.

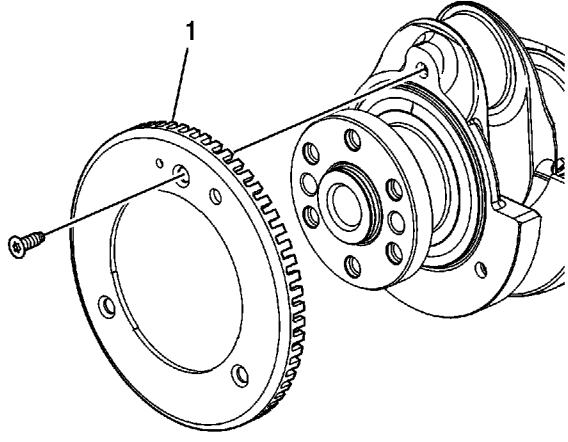

5. The crankshaft position reluctor ring (1) may be replaced if damaged. Tighten the crankshaft position reluctor ring bolts to **15 N·m (11 lb ft)**.

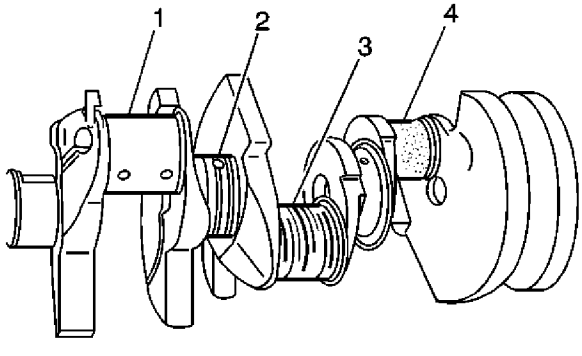

6. Inspect the crankshaft journals for wear (1). The journals should be smooth, with no signs of scoring, wear, or damage.
7. Inspect the crankshaft journals for grooves or scoring (2).
8. Inspect the crankshaft journals for scratches or wear (3).
9. Inspect the crankshaft journals for pitting or imbedded bearing material (4).

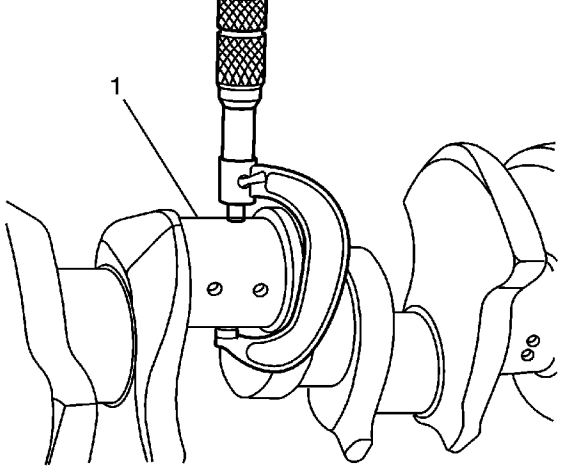

10. Measure the crankshaft journals (1) for out-of-round.
11. Measure the crankshaft journals for taper.

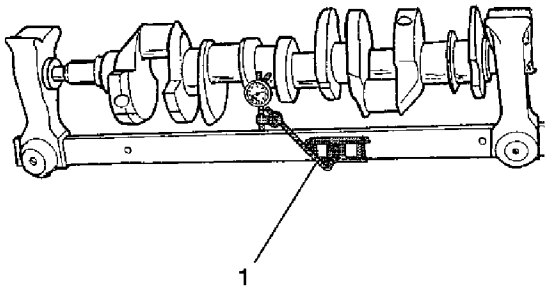

12. Measure the crankshaft runout.

    Using wooden V-blocks, support the crankshaft on the front and rear journals.

13. Use the *EN-7872* indicator (1) in order to measure the crankshaft runout at the front and rear intermediate journals.
14. Use the *EN-7872* indicator in order to measure the runout of the crankshaft rear flange.
15. Replace the crankshaft if the measurements are not within specifications.

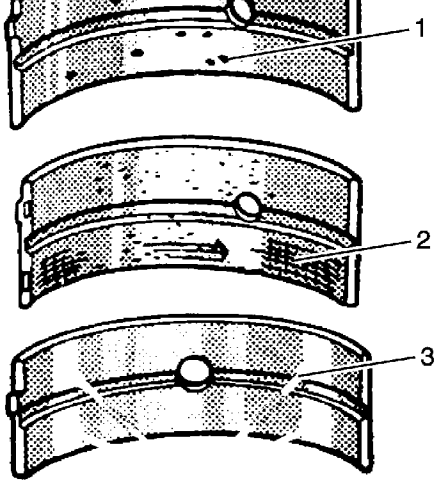

16. Inspect crankshaft bearings for craters or pockets (1). Flattened sections on the bearing halves also indicate fatigue.
17. Inspect the crankshaft bearings for excessive scoring or discoloration (2).
18. Inspect the crankshaft bearings for dirt or debris imbedded into the bearing material.
19. Inspect the crankshaft bearings for improper seating indicated by bright, polished sections of the bearing (3).

    If the lower half of the bearing is worn or damaged, both upper and lower halves should be replaced.

    Generally, if the lower half is suitable for use, the upper half should also be suitable for use.

Piston and Connecting Rod Disassemble

Special Tools

EN-46745 Piston Pin Retainer Remover and Installer

For equivalent regional tools, refer to Special Tools.

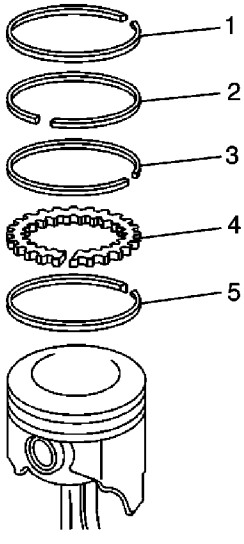

Warning: Handle the piston carefully. Worn piston rings are sharp and may cause bodily injury.

1. Disassemble the piston rings (1, 2, 3, 4, 5). Use a suitable tool to expand the rings. The piston rings must not be reused.

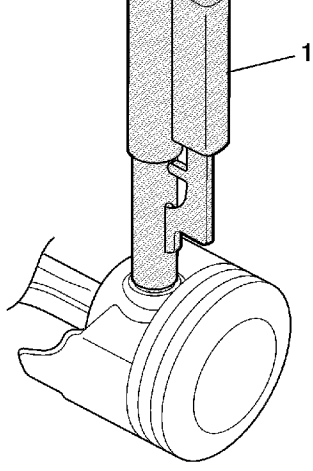

2148518

Note: Two retainers hold the piston pins in place. No special tools are required to remove the piston pins. Ensure that the piston pin is not damaged. Do not reuse the retainers.

2. Remove the piston pin retainers using the *EN-46745* remover (1).

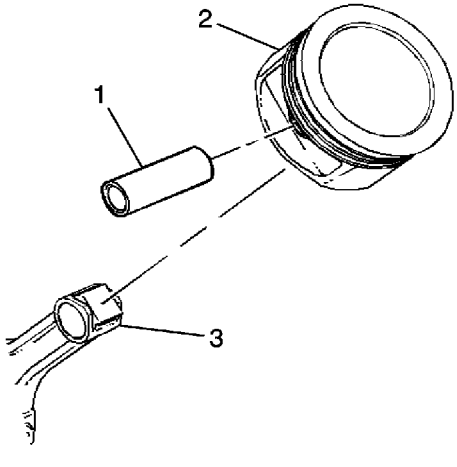

3. Remove the piston pin (1) and the connecting rod (3) from the piston (2).

Piston, Connecting Rod, and Bearing Cleaning and Inspection

Connecting Rod Measurement

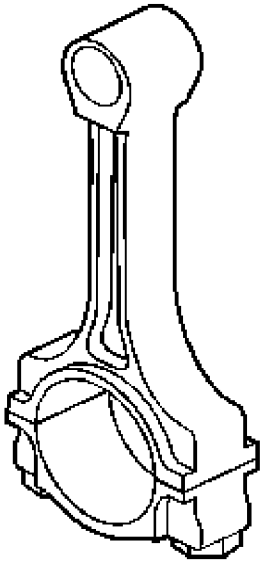

1. Clean the connecting rods in solvent and dry with compressed air.
2. Inspect the connecting rods for the following:
   - Signs of being twisted, bent, nicked, or cracked
   - Scratches or abrasion on the rod bearing seating surface
3. If the connecting rod bores contain minor scratches or abrasions, clean the bores in a circular direction with a light emery paper. DO NOT scrape the rod or rod cap.
4. If the beam of the rod is scratched or has other damage replace the connecting rod.
5. Measure the piston pin to connecting rod bore using the following procedure:
   5.1. Using an outside micrometer, take two measurements of the piston pin in the area of the connecting rod contact.
   5.2. Using an inside micrometer, measure the connecting rod piston pin bore.
   5.3. Subtract the piston pin diameter from the piston pin bore diameter.
   5.4. The clearance should not be more than 0.021 mm (0.0008 in).
6. If there is excessive clearance, replace the piston pin.
7. If there is still excessive clearance, replace the connecting rod.

Piston Measurement

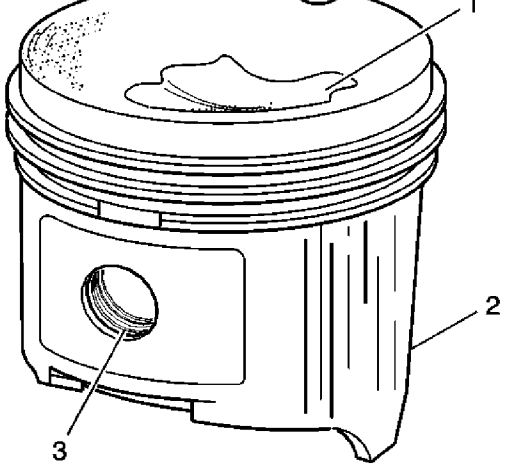

1. Clean the piston skirts and the pins with a cleaning solvent. DO NOT wire brush any part of the piston.
2. Clean the piston ring grooves with a groove cleaner. Make sure oil ring holes and slots are clean.
3. Inspect the pistons for the following conditions:
   - Cracked ring lands, skirts, or pin bosses
   - Ring grooves for nicks, burrs that may cause binding
   - Warped or worn ring lands
   - Eroded areas at the top of the piston (1)
   - Scuffed or damaged skirts (2)
   - Worn piston pin bores (3)
4. Replace pistons that show any signs or damage or excessive wear.
5. Measure the piston pin bore to piston pin clearances using the following procedure:
   5.1. Piston pin bores and pins must be free of varnish or scuffing.
   5.2. Use an outside micrometer to measure the piston pin in the piston contact areas.
   5.3. Using an inside micrometer, measure the piston pin bore.
   5.4. Subtract the measurement of the piston pin bore from the piston pin. The clearance should be within 0.002-0.012 mm (0.00007-0.00047 in).
   5.5. If the clearance is excessive, determine which component is out of specification.

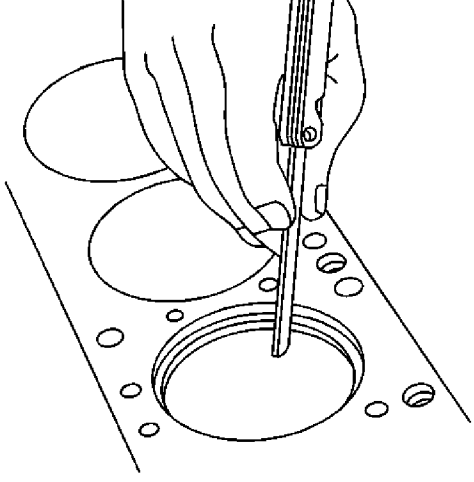

6. Measure the piston ring end gap using the following procedure:
   6.1. Place the piston ring in the area of the bore where the piston ring will travel (approximately 25 mm or 1 inch down from the deck surface). Be sure the ring is square with the cylinder bore by positioning the ring with the piston head.
   6.2. Measure the end gap of the piston ring with feeler gages. Compare the measurements with those provided below:
      - The top compression ring end gap should be 0.20-0.40 mm (0.0060-0.015 in).
      - The second compression ring end gap should be 0.35-0.55 mm (0.0137-0.0216 in).
      - The oil ring end gap should be 0.25-0.76 mm (0.0098-0.029 in).
   6.3. If the clearance exceeds the provided specifications, the piston rings must be replaced.
   6.4. Repeat the procedure for all the piston rings.

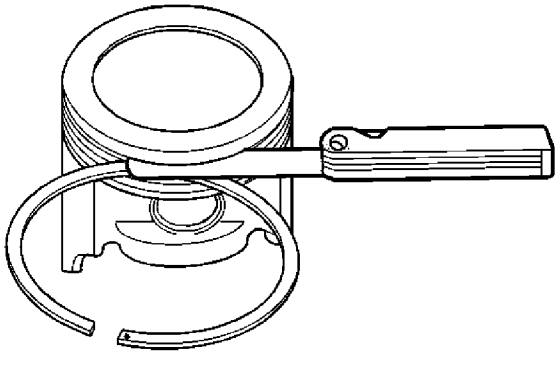

7. Measure the piston ring side clearance using the following procedure:
   7.1. Roll the piston ring entirely around the piston ring groove. If any binding is caused by a distorted piston ring, replace the ring.
   7.2. With the piston ring on the piston, use feeler gages to check clearance at multiple locations.
   7.3. The clearance between the surface of the top piston ring and the ring land should be no greater than 0.075 mm (0.0030 in).
   7.4. If the clearance is greater than specifications, replace the piston ring.
   7.5. If the new ring does not reduce the top ring side clearance to 0.075 mm (0.0030 in) or less, install a new piston.
8. The top compression ring may be installed with either side up. There is a locating dimple on the 2nd compression ring near the end for identification of the top side. Install the 2nd compression ring with the dimple facing up.
9. The clearance between the surface of the second piston ring and the ring land should be no greater than 0.069 mm (0.0026 in).
10. If the new ring does not reduce the clearance to 0.069 mm (0.0026 in) or less, install a new piston.

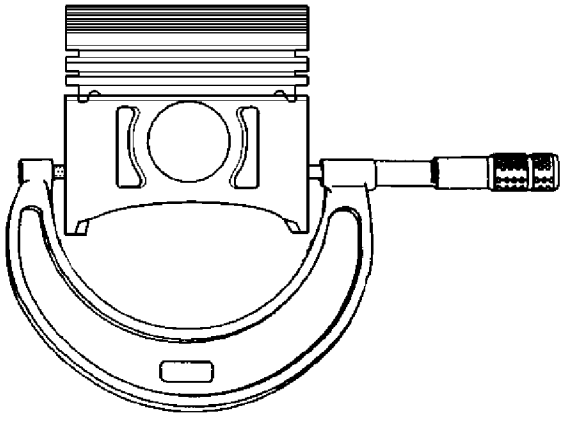

11. Measure piston width using the following procedure:
    11.1. Using an outside micrometer, measure the width of the piston 14.5 mm (0.570 in) above the bottom of the piston skirt at the thrust surface perpendicular to the centerline of the piston pin.
    11.2. Compare the measurement of the piston to its original cylinder by subtracting the piston width from the cylinder diameter.
    11.3. The proper clearance specification for the piston is 0.010-0.041 mm (0.0006-0.0016 in).
12. If the clearance obtained through measurement is greater than these specifications and the cylinder bores are within specification, replace the piston.

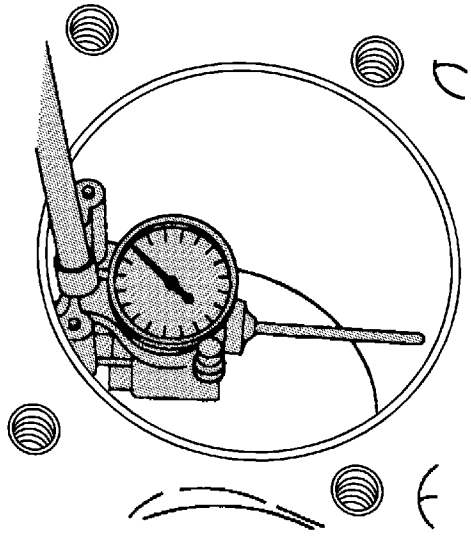

Important: Measurements of all components should be taken with the components at normal room temperature.

For proper piston fit, the engine block cylinder bores must not have excessive wear or taper.

A used piston and pin set may be reinstalled if, after cleaning and inspection, they are within specifications.

1. Inspect the engine block cylinder bore. Refer to Engine Block Cleaning and Inspection.
2. Inspect the piston and the piston pin. Refer to Piston, Connecting Rod, and Bearing Cleaning and Inspection.
3. Use a bore gauge and measure the cylinder bore diameter. Measure at a point 64 mm (2.5 in) from the top of the cylinder bore.

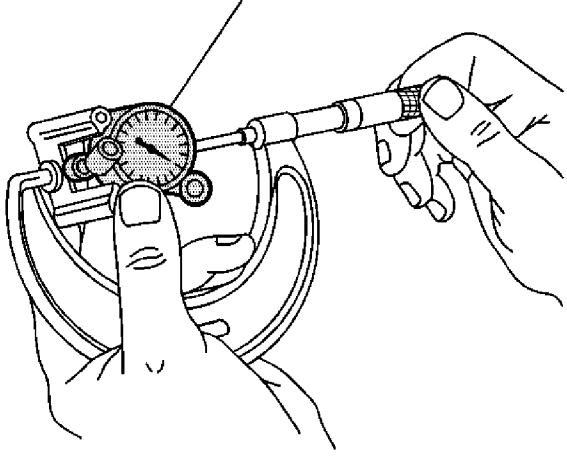

4. Measure the bore gauge with a micrometer and record the reading.

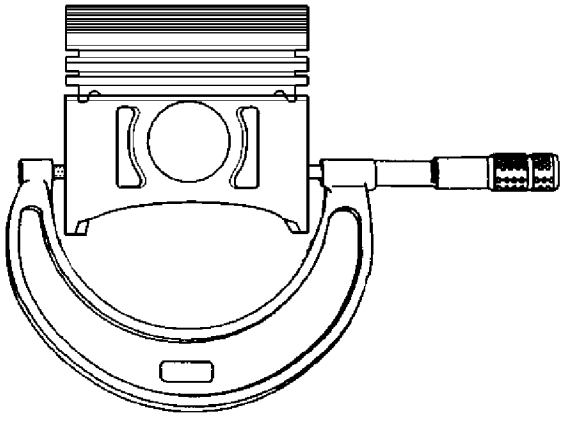

5. With a micrometer or caliper at a right angle to the piston, measure the piston 14 mm (0.570 in) from the bottom of the skirt.
6. Subtract the piston diameter from the cylinder bore diameter in order to determine piston-to-bore clearance.
7. For proper piston-to-bore clearance. Refer to Engine Mechanical Specifications.
8. If the proper clearance cannot be obtained, select another piston and measure for the clearances.
9. If the proper fit cannot be obtained, hone the cylinder bore or replace the cylinder block.
10. When the piston-to-cylinder bore clearance is within specifications, mark the top of the piston using a permanent marker for installation to the proper cylinder. Refer to Separating Parts.

Piston and Connecting Rod Assemble

Special Tools

EN-46745 Piston Pin Retainer Remover and Installer

For equivalent regional tools, refer to Special Tools.

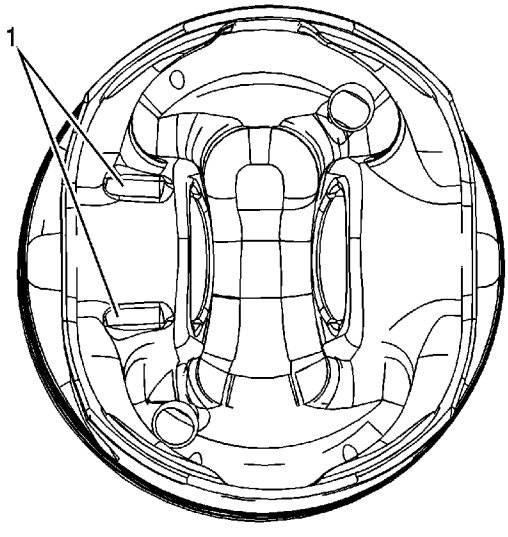

Note: Install the piston onto the connecting rod with the arrow on top of the piston toward the front oriented toward the front of the engine.

Note: The cast boss (1) can be in either or both locations depending on displacement.

1. The cast boss (1), on the underside of the piston, must go to the rear of the block.

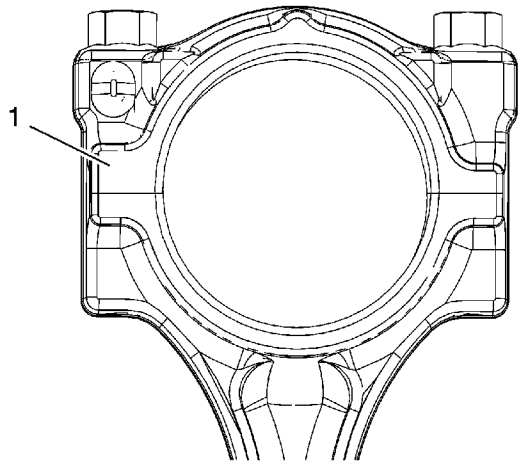

2. The larger feature (1), at the split line located on one side of the connecting rod, must go to the front of the block.

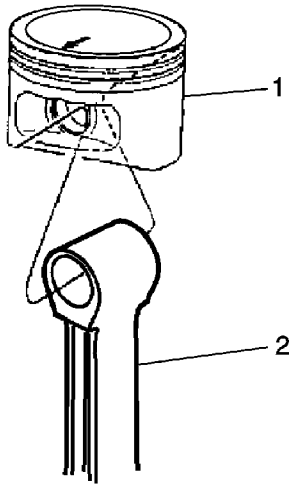

3. Assemble the connecting rod (2) and the piston (1).

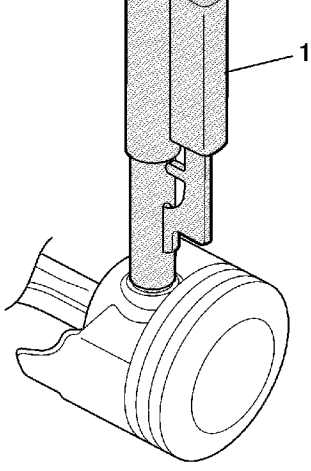

2148518

Caution: Install the piston pin retainers correctly in the retaining groove during assembly in order to avoid engine damage.

4. Use the following procedure to assemble the piston pin and the retainer:
   4.1. Coat the piston pin with oil.
   4.2. Install one side of one piston pin retainer into the retaining groove using *EN-46745* installer . Rotate the retainer until it is fully seated in the groove.
   4.3. Install the connecting rod and the piston pin.

   Push the piston pin until it bottoms in the previously installed retainer.

   4.4. Install the second piston pin retainer, using *EN-46745* installer (1).
   4.5. Ensure that the piston moves freely.

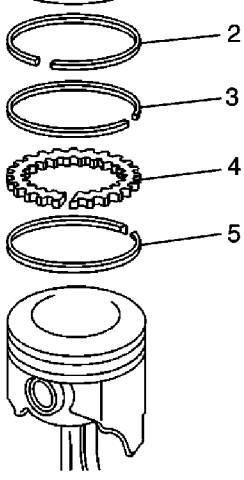

Caution: Use a piston ring expander to install the piston rings. The rings may be damaged if expanded more than necessary.

5. Install the following components of the oil control ring assembly (bottom ring):
   5.1. The expander (5)
   5.2. The lower oil control ring (4)
   5.3. The upper control ring (3)
6. Install the lower compression ring (2). Place the manufacturer's mark facing up.
7. Install the upper compression ring (1).

Camshaft Cleaning and Inspection

- 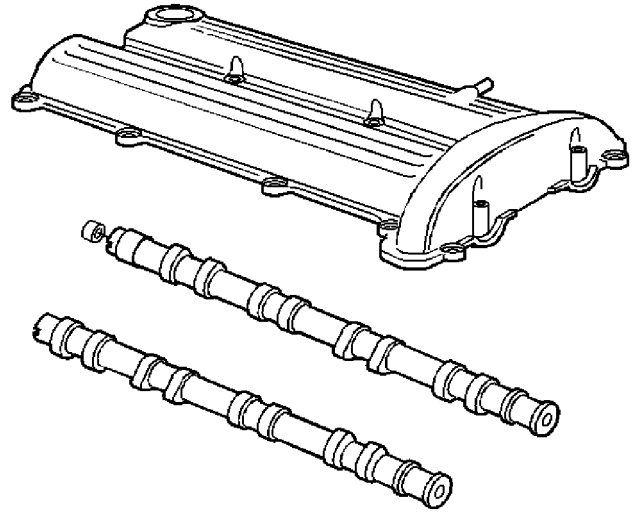

- Inspect the camshaft journals and lobes for wear or scoring.
- Inspect the camshaft sprocket alignment notch for damage.
- Inspect the camshaft cover for damage or loose oil control baffles.
- Clean the camshaft cover.
- Wash the camshaft in solvent.
- Oil the camshaft.
- Inspect the camshaft cover for cracks or other signs of damage.

Camshaft Timing Chain and Sprocket Cleaning and Inspection

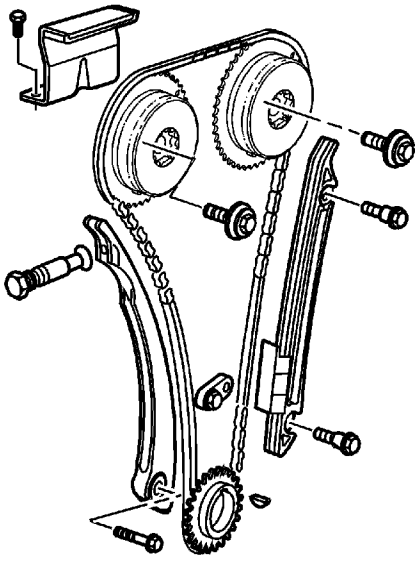

1. Inspect the timing chain guides for cracking or wear.
2. Replace the timing chain guides if wear exceeds 1.12 mm (0.045 in) depth on the chain guide surface.
3. Inspect the timing chain tensioner shoe for wear.
4. Replace the timing chain tensioner shoe if wear exceeds 1.12 mm (0.045 in) depth on the chain guide surface.
5. Inspect the timing chain and actuators for wear.
6. Inspect the camshaft actuator faces for signs of movement.
7. Inspect the camshaft actuator teeth and chain for signs of excessive wear, chipping, or seizure of the timing chain links.
8. Inspect the oil nozzle body for collapse or cracks at the bolt boss. Discard and replace the oil nozzle body if it is damaged.
9. Verify oil nozzle oil flow with compressed air.
10. Inspect the timing chain tensioner for the scoring or free movement.
11. Inspect the timing chain tensioner washer and O-ring for damage. If damaged, replace the timing chain tensioner.

Balance Shaft Cleaning and Inspection

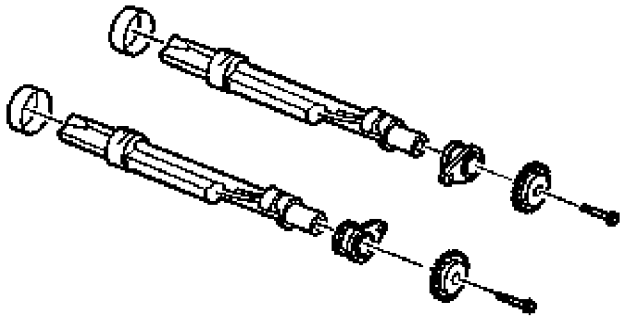

1. Clean the balance shafts in solvent.
2. Remove the balance shaft front bearing carriers from the balance shafts.
3. Inspect the bearing surfaces on the balance shafts for scoring or unusual wear.
4. Inspect the balance shaft drive sprockets for wear, damage, or missing teeth. When installing balance shaft drive sprockets tighten to 55 N·m (41 lb ft).
5. Measure the rear bearing journals on the balance shafts, the journals should be 36.723-36.743 mm (1.4458-1.4466 in) in diameter.
6. Measure the front bearing journals on the balance shafts, the front bearing journals should be 20.020-20.000 mm (0.7881-0.7874 in) in diameter.
7. When the balance shafts have been installed in the engine block, check for smooth rotation, sticking, binding, or roughness.

Water Pump and Balance Shaft Chain and Sprocket Cleaning and Inspection

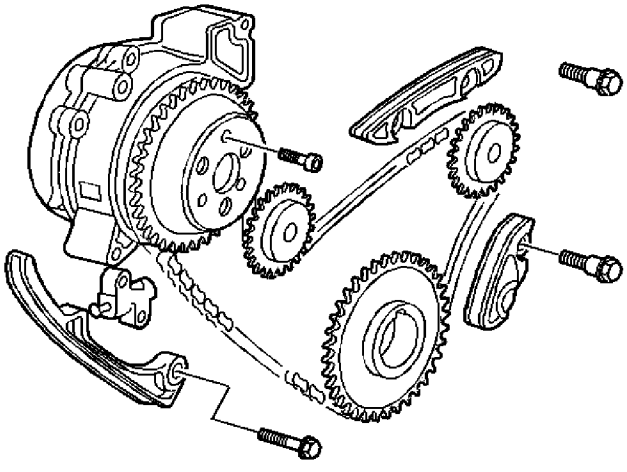

1. Inspect the balance shaft drive chain guides for cracking or wear.
2. Replace the balance shaft drive chain guides if wear exceeds 1.12 mm (0.045 in) depth on the chain guide surface.
3. Inspect the balance shaft drive chain tensioner guide shoe for wear.

   Replace the balance shaft drive chain tensioner guide shoe if wear exceeds 1.12 mm (0.045 in) depth on the chain guide surface.

4. Inspect the balance shaft drive chain and sprockets for wear.
5. Inspect the crankshaft sprocket faces for signs of movement.
6. Inspect the alignment notch in the balance shaft for cracking or damage.
7. Inspect the water pump, crankshaft, and balance shaft sprocket teeth and chain for signs of excessive wear, chipping, or seizure of the balance shaft drive chain links.
8. Inspect the timing chain tensioner for damage or wear.

Cylinder Head Disassemble

Special Tools

- *EN-8062* Valve Spring Compressor
- *EN-36017* Valve Seal Remover
- *EN-43963* Valve Spring Compressor (off car)

For equivalent regional tools, refer to Special Tools.

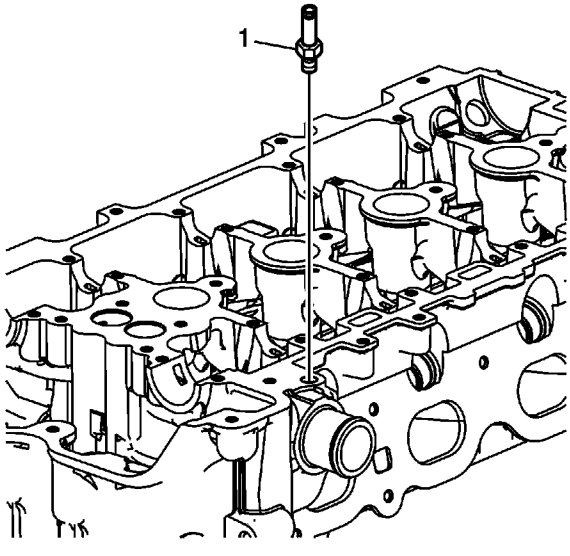

1. Remove the coolant air bleed hose fitting (1).

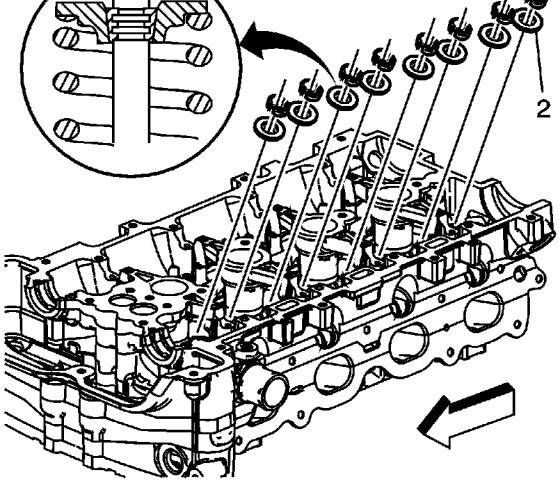

Note: Ensure that the valve train components are kept together and identified in order for proper re-installation in their original position.

2. Using the *EN-8062* compressor and the *EN-43963* compressor (off car) , compress the valve spring.
3. Remove the valve keys (1).
4. Slowly release the *EN-8062* compressor and the *EN-43963* compressor (off car) from the valve spring assembly.
5. Remove the retainer (2).

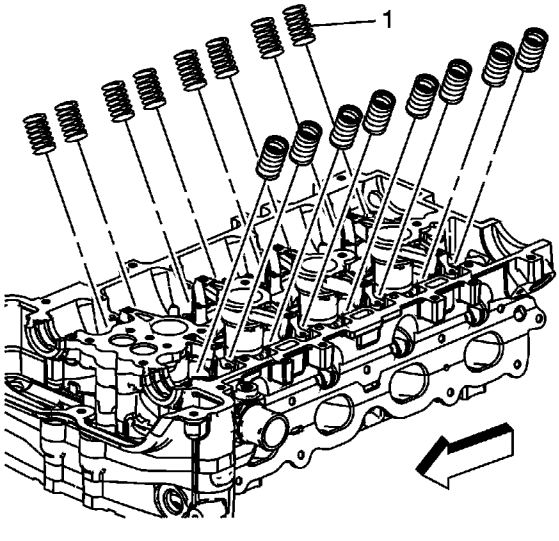

6. Remove the springs (1).

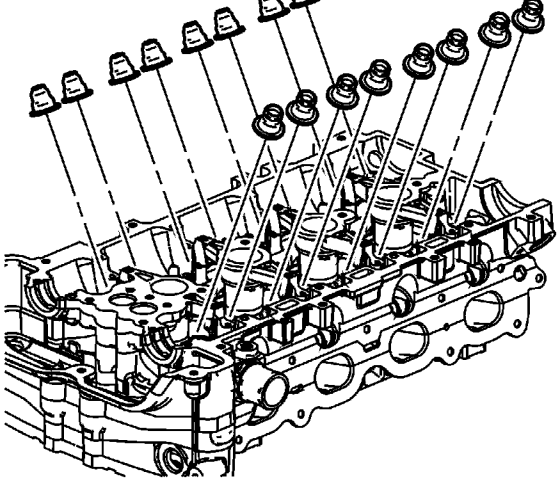

Caution: Do not damage the valve guide. Remove any burrs that have formed at the key groove by chamfering the valve stem with an oil stone or a file.

7. Remove the valve seals (1). Use the *EN-36017* remover . Do not reuse.

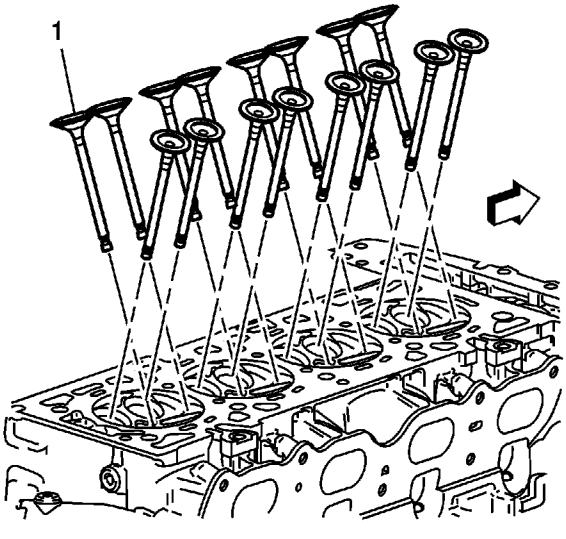

8. Remove the valves (1).

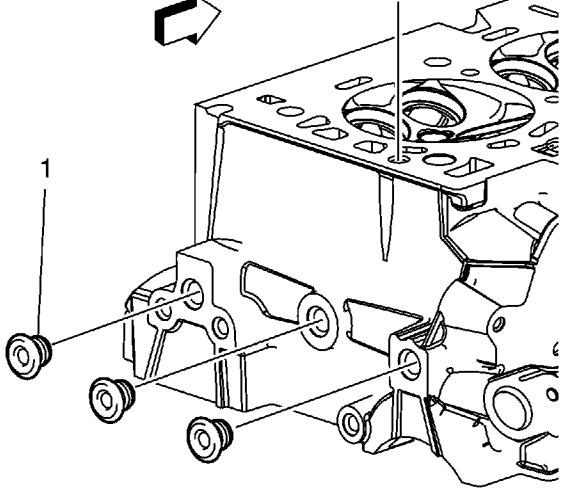

9. Remove the cylinder head plugs (1) and oil restrictor.

Cylinder Head Cleaning and Inspection

Valve Cleaning and Inspection

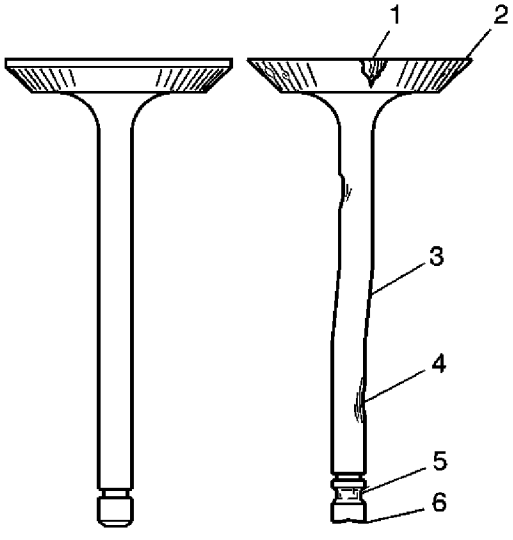

Important: Do not scratch the valve stem with the wire brush.

1. Clean the valves of carbon, oil and varnish. Carbon can be removed with a wire brush. Varnish can be removed by soaking in Parts Immersion Solvent GM P/N 12345368 (Canadian P/N 10953514) or equivalent.
2. Clean the valve guides.
3. Inspect the valve stem for wear (4).
4. Inspect the valve key groove for chipping or wear (5). Replace the valve if chipped or worn.
5. Inspect the valve face for burning or cracking (1). If pieces are broken off, inspect the corresponding piston and cylinder head area for damage.
6. Inspect the valve stem for burrs and scratches. Burrs and minor scratches may be removed with an oil stone.
7. Inspect the valve stem for straightness and the valve head for bending or distortion (3) using V blocks. Bent or distorted valves must be replaced.
8. Clean the deposits from the valve face. Inspect the valve face for grooving.
9. Replace the valve if the face is grooved. Valve faces cannot be machined. If worn, or damaged, the valves must be replaced.
10. The valves may be lightly lapped to the valve seats.

Cylinder Head and Gasket Surface Cleaning and Inspection

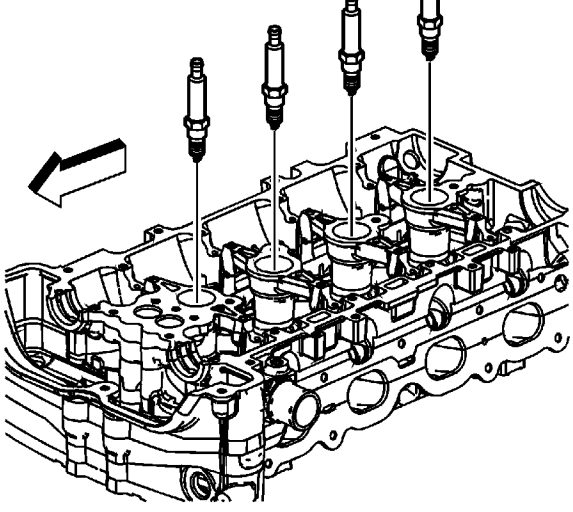

1. Remove the spark plugs.
2. Inspect the cylinder head gasket and mating surfaces for leaks, corrosion and blow-by. If the gasket has failed, use the following faults to determine the cause:
   2.1. Improper installation
   2.2. Loose or warped cylinder head
   2.3. Missing, off location or not fully seated dowel pins
   2.4. Corrosion in the seal area around the coolant passages
   2.5. Chips or debris in the cylinder head bolt holes
   2.6. Bolt holes in the cylinder block not drilled or tapped deep enough

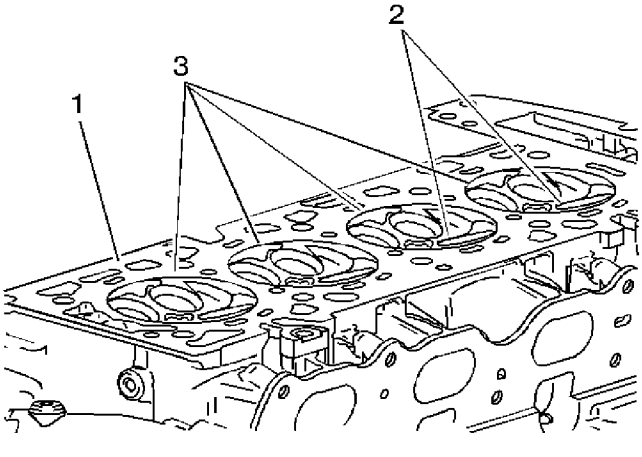

3. Inspect the cylinder head gasket surface.

- Replace the cylinder head if the area between the valve seats is cracked (2).
- Replace the cylinder head if corrosion has been found inside a 4 mm (0.375 in) band around each combustion chamber (3).

4. Clean the cylinder head bolts.

   Important: Do not use a wire brush on any gasket sealing surface.

5. Clean the cylinder head. Remove all varnish, soot and carbon to the bare metal.
6. Clean the valve guides.
7. Clean the threaded holes. Use a nylon bristle brush.
8. Clean the remains of the sealer from the plug holes.
9. Inspect the cylinder head bolts for damaged threads or stretching and damaged heads caused by improper use of tools.
10. Replace all suspect bolts.
11. Inspect the cylinder head for cracks. Check between the valve seats and in the exhaust ports.

    Important: Do not attempt to weld the cylinder head, replace it.

12. Inspect the cylinder head deck for corrosion, sand inclusions and blow holes.

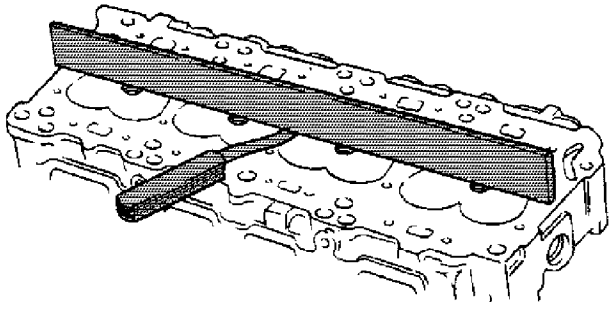

13. Inspect the cylinder head deck surface for flatness. Refer to Engine Mechanical Specifications. If the cylinder head is out of specification, replace the cylinder head. Do not machine the cylinder head.
14. Inspect all the threaded holes for damage. Threads may be reconditioned with thread inserts.
15. Inspect the sealing surfaces.

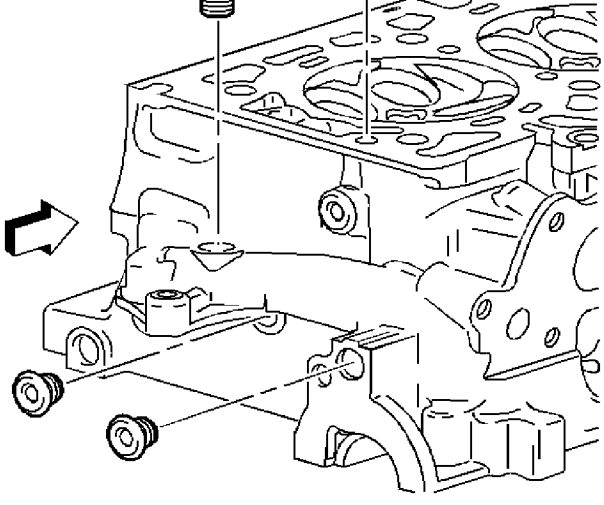

16. Inspect the cylinder head plugs and verify the oil orifice is clear and free of debris.

Cylinder Head Assemble

Special Tools

- *EN-8062* Valve Spring Compressor
- *EN-9666* Valve Spring Tester
- *EN-43963* Valve Spring Compressor (off car)

For equivalent regional tools, refer to Special Tools.

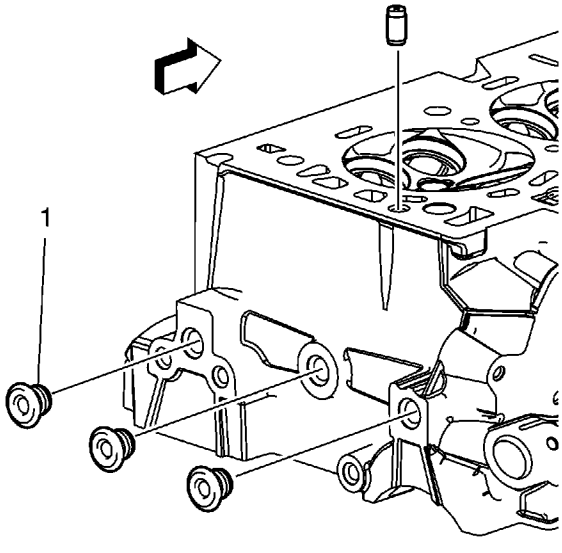

Caution: In order to avoid damage, install the spark plugs after the cylinder head has been installed on the engine.

1. Install NEW cylinder head plugs (1). Coat the plugs with sealer GM P/N 12345382 (Canadian P/N 10953489) or equivalent.
2. Inspect the valve springs for the following conditions:
   - Expanded height
   - Unparallel spring ends
   - Spring tension using *EN-9666* tester
   - Any distorted springs should be replaced

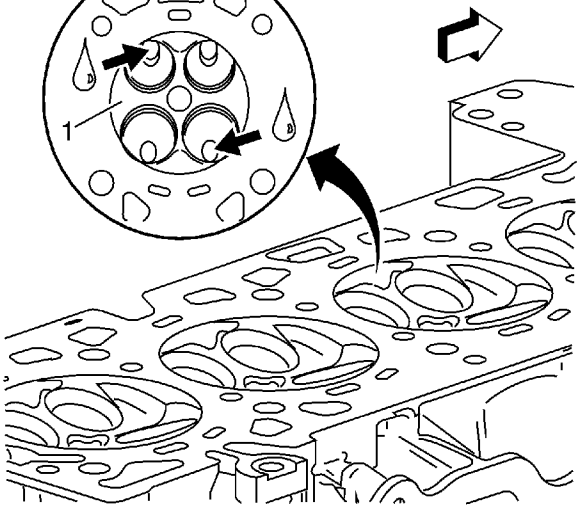

3. Assemble the valves (1).
4. Use the following steps to measure valve runout:
   4.1. Apply a dab of Prussian blue on the entire valve face. Seat the valve but do not rotate it. The Prussian blue traces transferred to the valve seat are an indication of concentricity of the valve seat.
   4.2. Clean all traces of Prussian blue.
   4.3. Apply a dab of Prussian blue on the valve seat and repeat the check. The traces of Prussian blue transferred to the valve face indicates valve face concentricity.

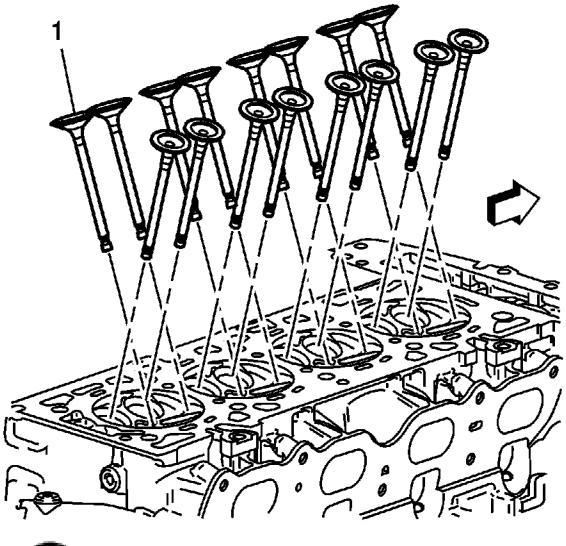

5. Replace the valves (1), if required.

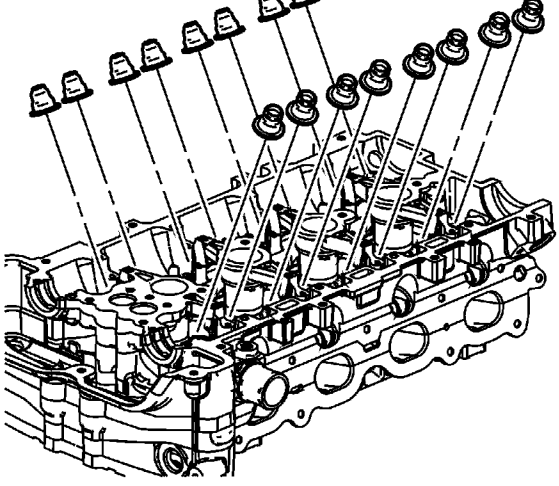

6. Install the new valve seals (1). Fully seat the seals on the valve guides.

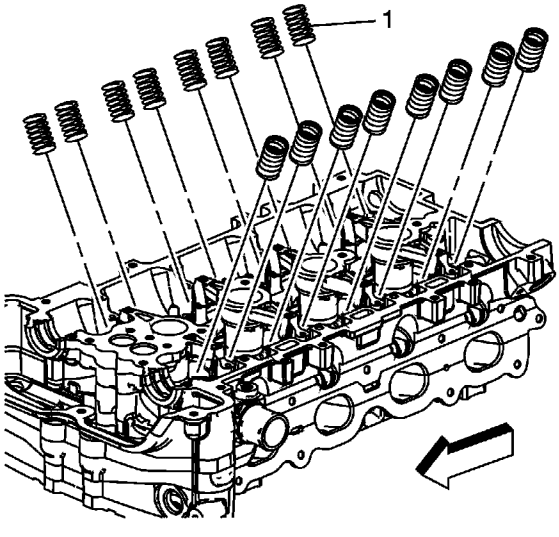

7. Install the springs (1).

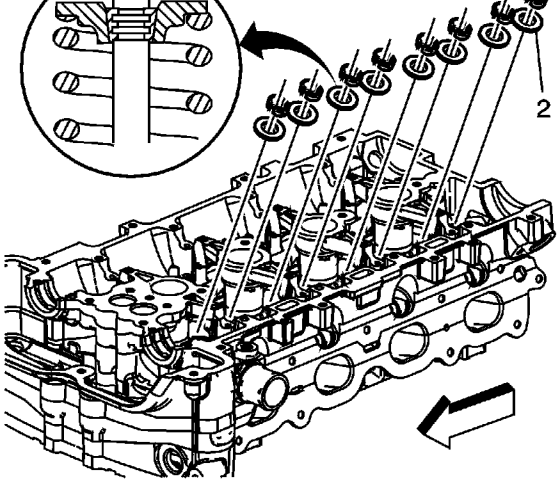

8. Install the retainer (1).
9. Using the *EN-8062* compressor and the *EN-43963* compressor (off car) , compress the valve spring.
10. Install the valve keys.
11. Slowly release the *EN-8062* compressor and the *EN-43963* compressor (off car) from the valve/spring assembly.
12. Inspect for proper valve key seating.
13. Install the remaining valves, springs, and other components.

    Caution: Refer to Fastener Caution in the Preface section.

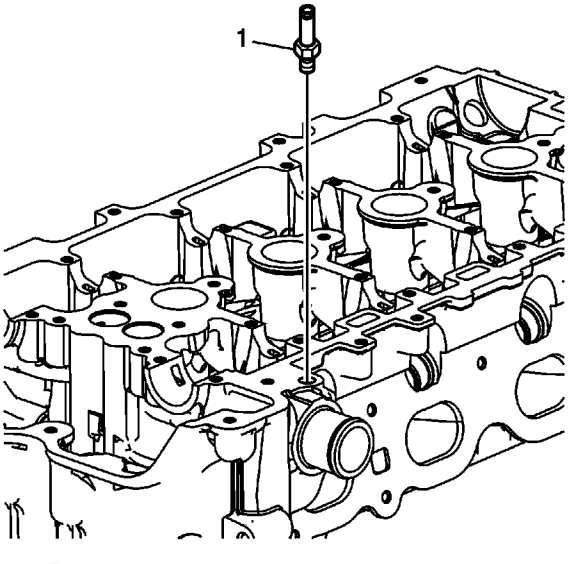

14. Install the cylinder head air bleed tube (1) and tighten the tube to **15 N·m (11 lb ft)**.

Oil Pump Disassemble

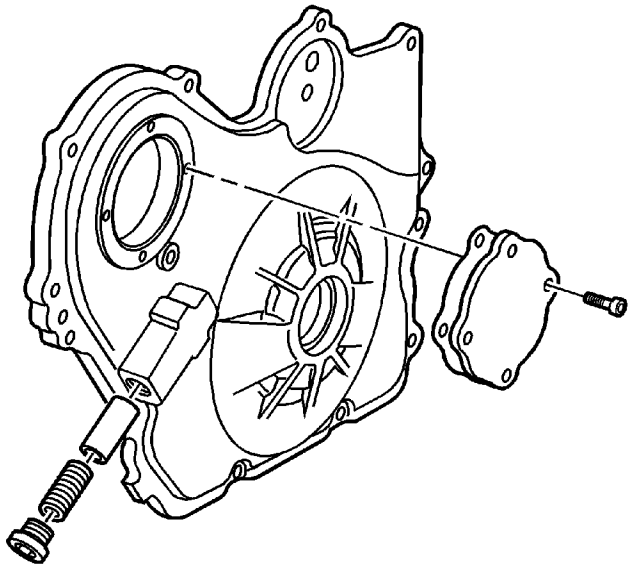

1. Disassemble the pressure relief valve.

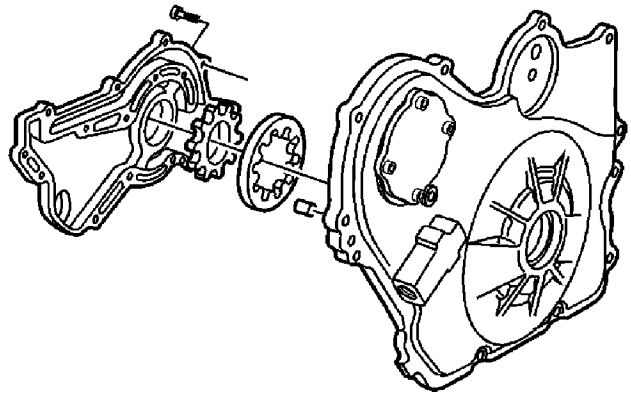

2. Remove the oil pump gerotor cover and bolts.
3. Clean all of the parts in cleaning solvent. Remove varnish, sludge and dirt.
4. Inspect the oil pump for wear and scoring. Insure that all components are within specifications. Refer to Engine Mechanical Specifications .

Oil Pump Assemble

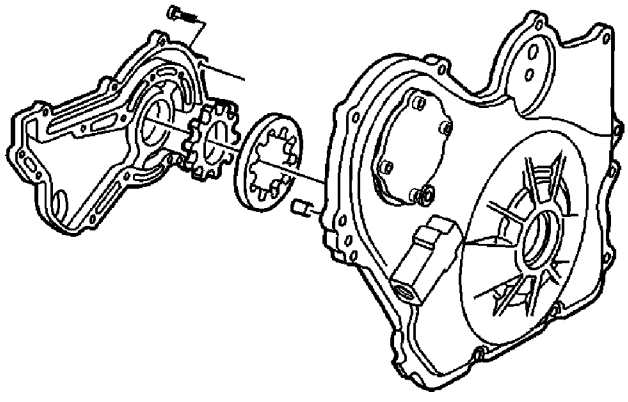

1. Lubricate all oil pump parts with engine oil.
2. Install the inner gear into the outer gear.

   Note: If gears are improperly installed in the front cover, the gerotor cover will not bolt on.

3. Install the gears together into the front cover with the hub of the center gear facing the front cover.

   Caution: Refer to Fastener Caution in the Preface section.

4. Install the oil pump gerotor cover and bolts and tighten to **6 N·m (53 lb in)**.

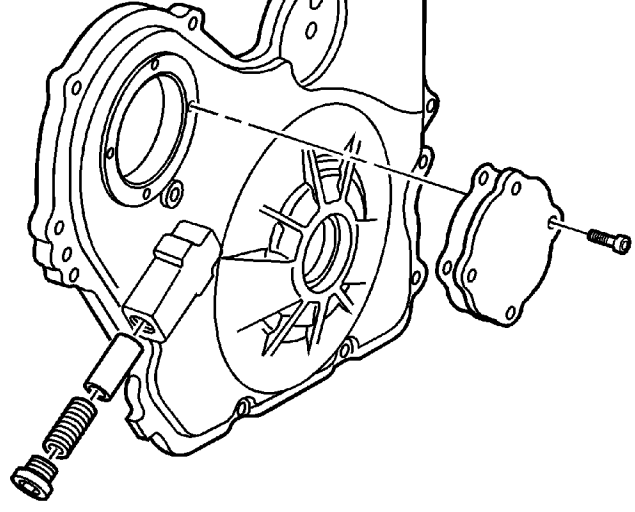

5. Install the pressure relief valve piston.
6. Install the pressure relief valve spring.
7. Install and tighten the pressure relief valve plug to **40 N·m (30 lb ft)**.

Intake Manifold Cleaning and Inspection

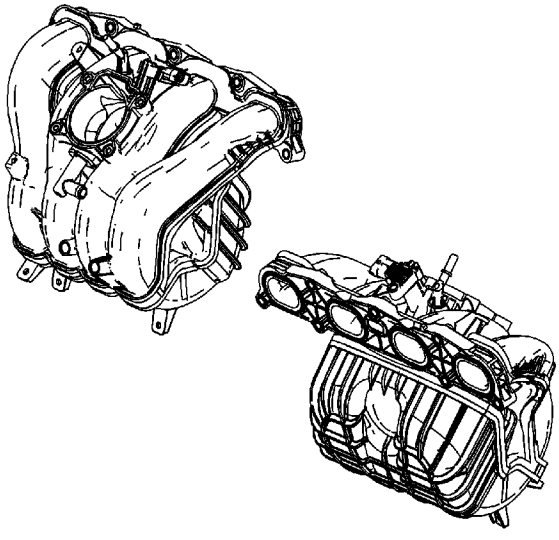

1. Clean the intake manifold mating surfaces.
2. Inspect the intake manifold for damage.
3. Inspect the intake manifold for cracks near metallic inserts.
4. Inspect the crankcase ventilation passages in the intake manifold face for blockage.

Warning: Refer to Safety Glasses Warning in the Preface section.

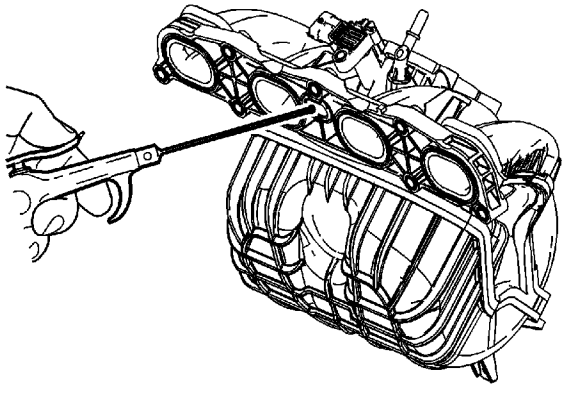

5. Clean the crankcase ventilation passages with compressed air if necessary. Use a maximum of 172 kPa (25 psi) of air pressure.
6. Replace the intake manifold as necessary.

Exhaust Manifold Cleaning and Inspection

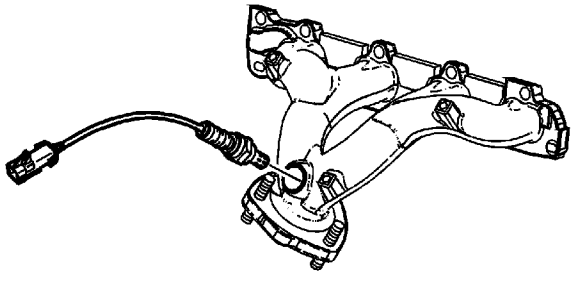

Note:

- Do not reuse the exhaust manifold-to-cylinder head gaskets. Upon installation of the exhaust manifold, install a NEW gasket. An improperly installed gasket or leaking exhaust system may effect On-Board Diagnostics (OBD) II system performance.
- Remove the oxygen sensor prior to cleaning the manifold. Do not submerge the oxygen sensor in cleaning solvent.

1. Remove the oxygen sensor from the manifold.
2. Clean the exhaust manifold in solvent.

   Warning: Refer to Safety Glasses Warning in the Preface section.

3. Dry the exhaust manifold with compressed air.
4. Inspect the heat shield for damage.

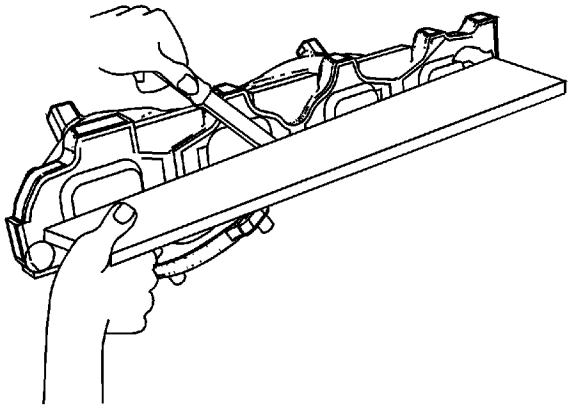

5. Use a straight edge and a feeler gage and measure the exhaust manifold mounting face for warpage.

   An exhaust manifold face with warpage in excess of 0.25 mm (0.0100 in) may cause an exhaust leak and may effect OBD II system performance. Exhaust manifolds not within specifications must be replaced.

Oil Pan Cleaning and Inspection

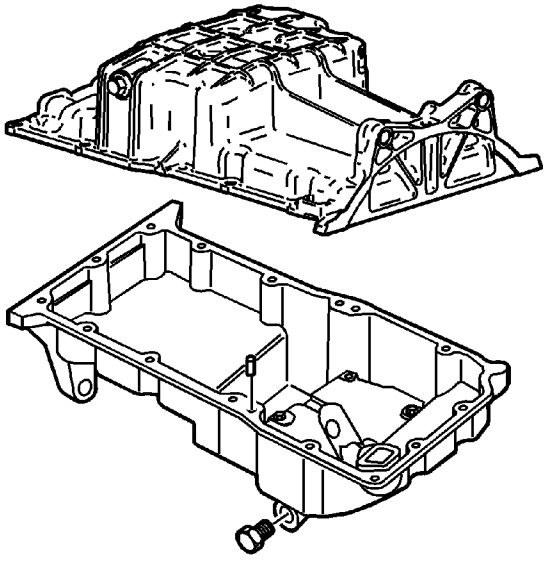

1. Clean the oil pan mating surface.
2. Clean the oil pan. Remove all the sludge and the oil deposits.
3. Inspect the threads for the engine oil drain plug.
4. Inspect the oil pan for cracking near the pan rail and the transmission mounting points.
5. Inspect the oil pan for cracking resulting from impact or flying road debris.

Important: The oil pan baffle and pickup screen are not removable from the oil pan.

6. Inspect the oil pan baffle and pickup screen.
7. Repair or replace the oil pan as necessary.

Thread Repair

Special Tools

J 42385-850 Thread Repair Kit

For equivalent regional tools, refer to Special Tools.

General Thread Repair

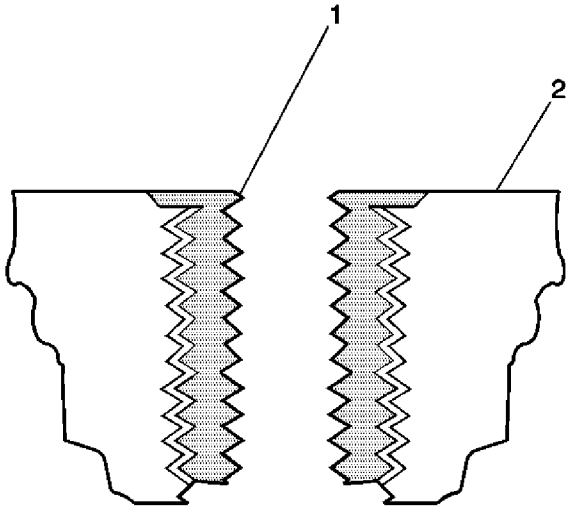

The thread repair process involves a solid, thin walled, self-locking, carbon steel, bushing type insert (1). During the bushing installation process, the driver tool expands the bottom external threads of the insert into the base material (2). This action mechanically locks the insert in place. Also, when installed to the proper depth, the flange of the insert will be seated against the counterbore of the repaired hole.

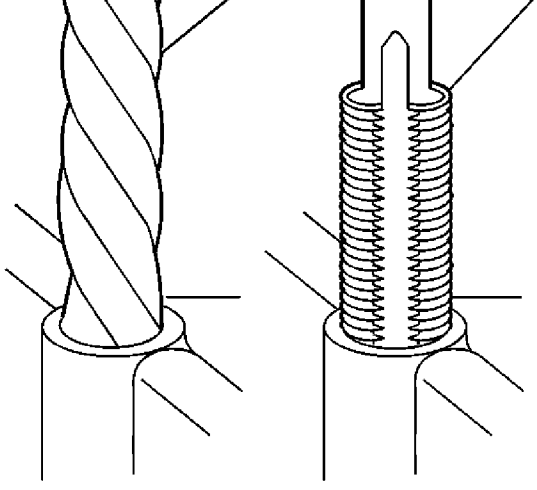

Note: The use of a cutting type fluid GM P/N 1052864 (Canadian P/N 992881), WD 40®, or equivalent, is recommended when performing the drilling, counterboring, and tapping procedures.

Driver oil MUST be used on the installer driver tool.

The tool kits are designed for use with either a suitable tap wrench or drill motor.

1. Drill out the threads of the damaged hole (1).
   - M6 inserts require a minimum drill depth of 15 mm (0.59 in).
   - M8 inserts require a minimum drill depth of 20 mm (0.79 in).
   - M10 inserts require a minimum drill depth of 23.5 mm (0.93 in).

   Warning: Refer to Safety Glasses and Compressed Air Warning in the Preface section.

2. Using compressed air, clean out any chips.

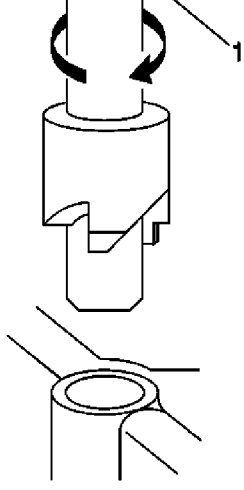

3. Counterbore the hole to the full depth permitted by the tool (1).
4. Using compressed air, clean out any chips.

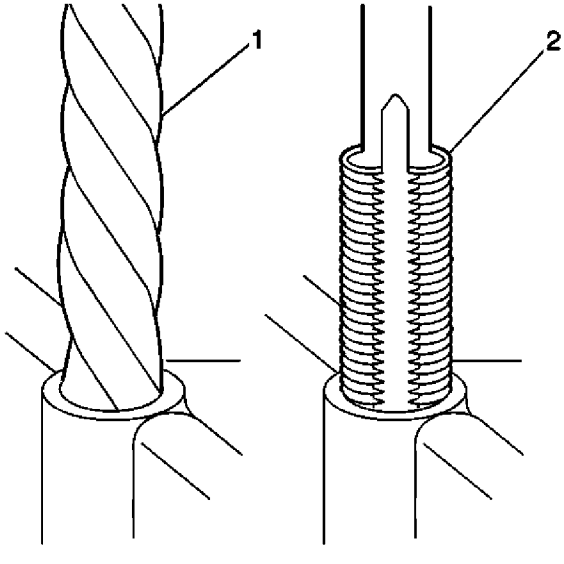

5. Using a tap wrench (2), tap the threads of the drilled hole.
   - M6 inserts require a minimum tap depth of 15 mm (0.59 in).
   - M8 inserts require a minimum tap depth of 20 mm (0.79 in).
   - M10 inserts require a minimum tap depth of 23.5 mm (0.93 in).

   Warning: Refer to Safety Glasses and Compressed Air Warning in the Preface section.

   Warning: Refer to Cleaning Solvent Warning in the Preface section.

6. Using compressed air, clean out any chips.

8. Using compressed air, clean any cutting oil and chips out of the hole.

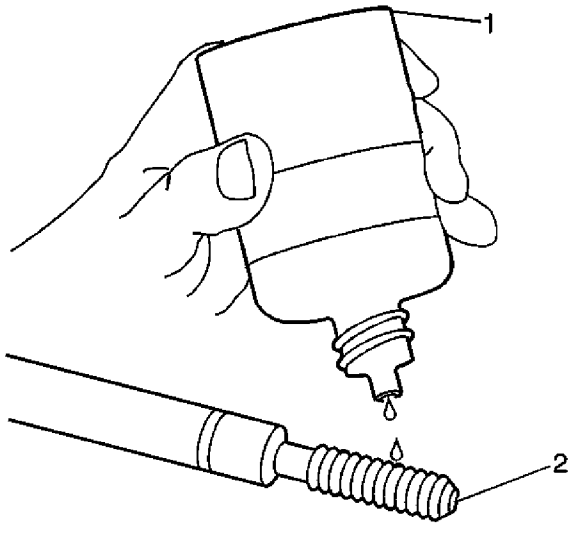

Note: Do not allow oil or other foreign material to contact the outside diameter (OD) of the insert.

9. Lubricate the threads of the installer tool (2) with the driver oil (1).

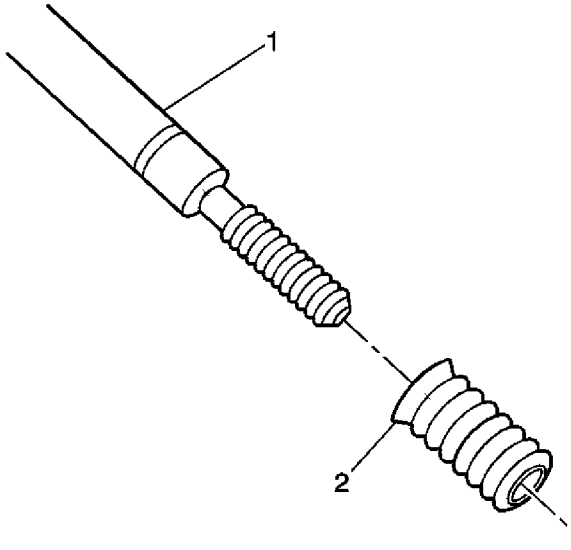

10. Install the insert (2) onto the driver tool (1).

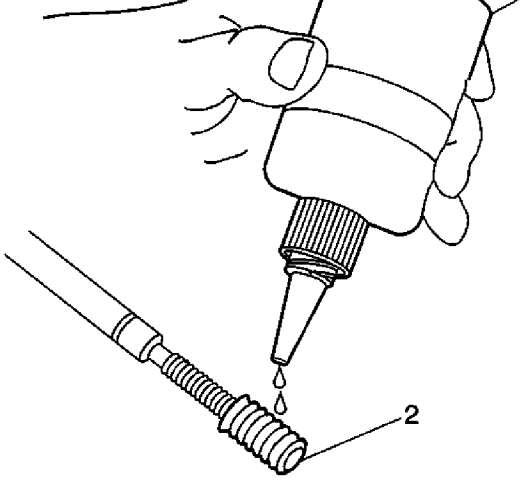

11. Apply threadlock LOCTITE™ 277, *J 42385-109 (1)* loctite , or equivalent to the insert OD threads (2).

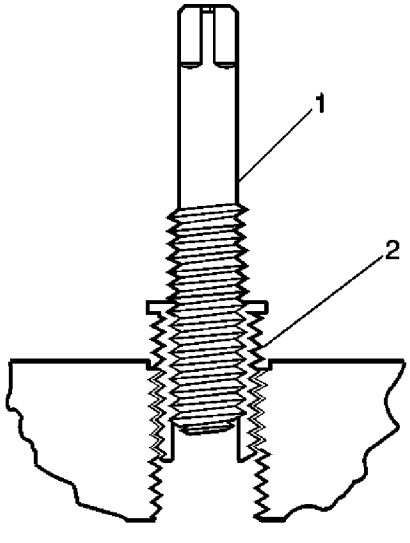

12. Install the insert (2) into the hole.

    Install the insert until the flange of the insert contacts the counterbored surface. Continue to rotate the installer tool (1) through the insert.

    The installer tool will tighten up before screwing completely through the insert. This is acceptable. You are forming the bottom threads of the insert and mechanically locking the insert to the base material threads.

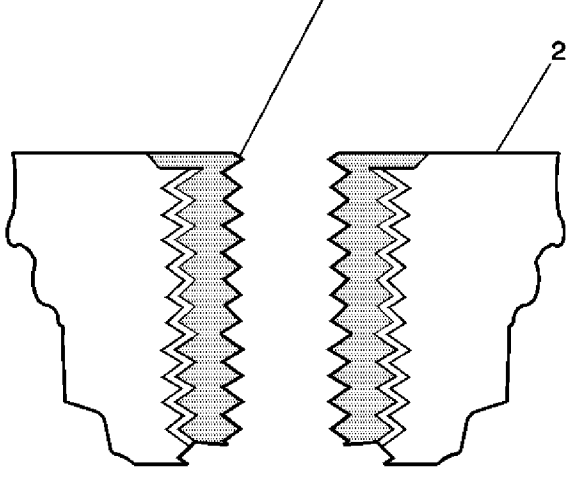

13. Inspect the insert for proper installation into the hole.

    A properly installed insert (1) will be either flush or slightly below flush with the surface of the base material (2).

Cylinder Head Bolt Hole Thread Repair

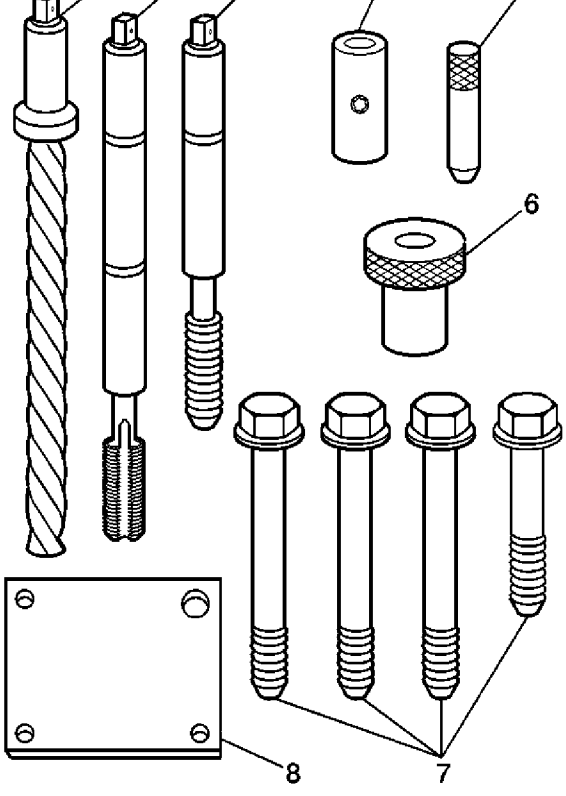

1. The cylinder head bolt hole thread repair kit consists of the following items:
   - Drill (1)
   - Tap (2)
   - Installer (3)
   - Sleeve (4)
   - Alignment Pin (5)
   - Bushing (6)
   - Bolts (7)
   - Fixture Plate (8)

Warning: Refer to Safety Glasses and Compressed Air Warning in the Preface section.

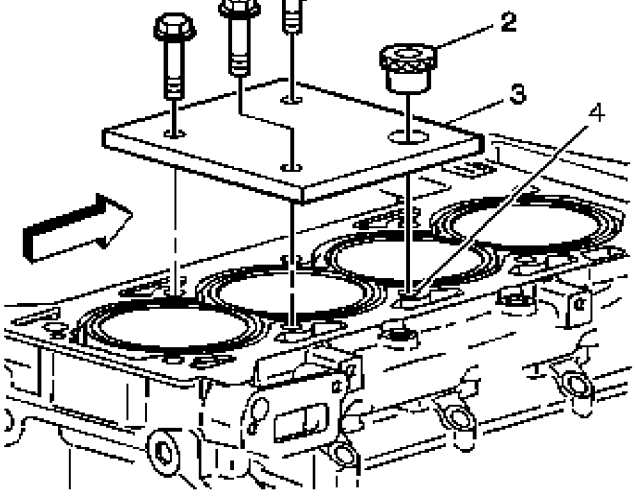

Note: The use of a cutting type fluid GM P/N 1052864 (Canadian P/N 992881), WD 40®, or equivalent, is recommended when performing the drilling and tapping procedures.

Driver oil MUST be used on the installer driver tool.

The tool kits are designed for use with either a suitable tap wrench or drill motor.

2. Install the fixture plate (3), bolts (1), and bushing (2) onto the engine block deck.

   Position the fixture plate and bushing over the hole that is to be repaired (4).

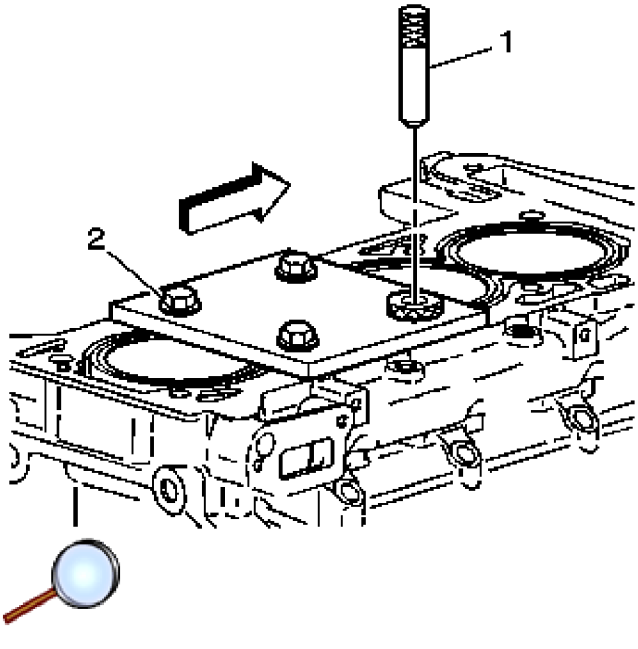

5. Remove the alignment pin from the hole.

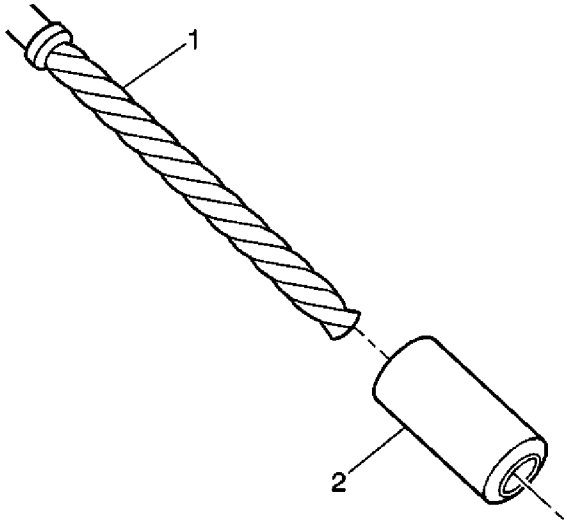

6. Install the sleeve (2) onto the drill (1), if required.

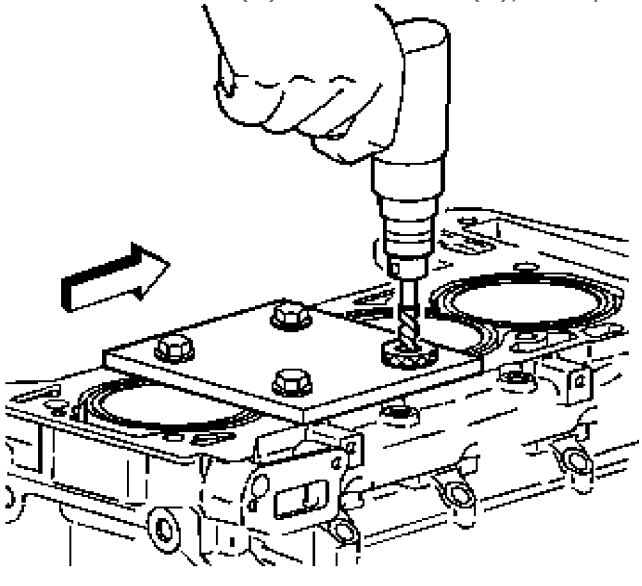

Note: During the reaming process, it is necessary to repeatedly remove the drill and clean the chips from the hole.

7. Drill out the threads of the damaged hole.

   Drill the hole until the stop collar of the drill bit or the sleeve contacts the bushing.

   Warning: Refer to Safety Glasses and Compressed Air Warning in the Preface section.

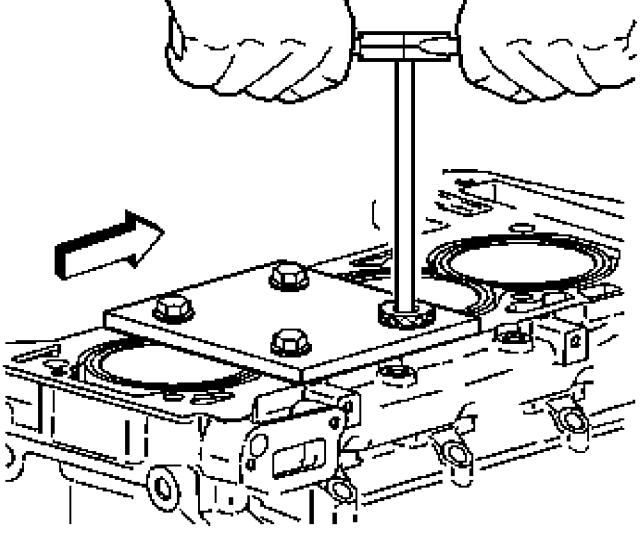

9. Using a tap wrench, tap the threads of the drilled hole.

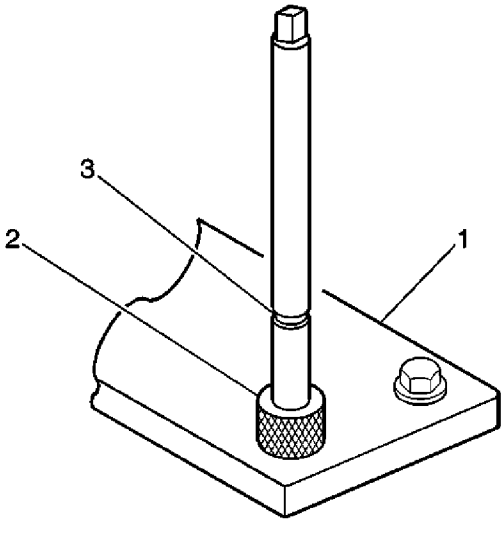

10. Using a TAP wrench, tap the threads of the drilled hole.

    In order to tap the new threads to the proper depth, rotate the tap into the hole until the mark (3) on the tap align with the top of the drill bushing (2).

11. Remove the fixture plate (1), bushing (2), and bolts.

    Warning: Refer to Safety Glasses and Compressed Air Warning in the Preface section.

    Warning: Refer to Cleaning Solvent Warning in the Preface section.

equivalent, into the hole.

14. Using compressed air, clean any cutting oil and chips out of the hole.

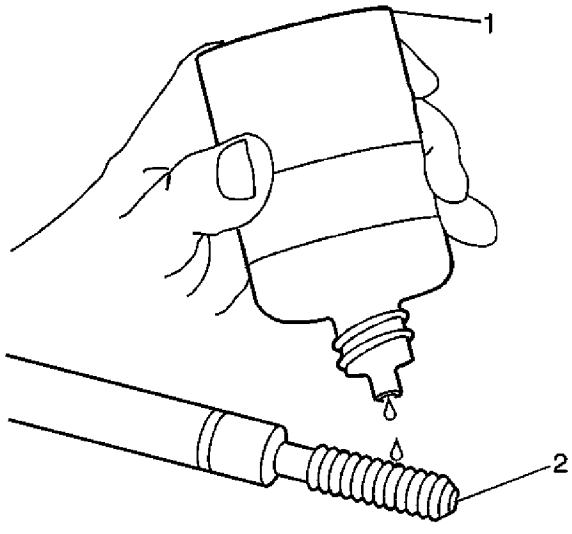

Note: Do not allow oil or other foreign material to contact the outside diameter (OD) of the insert.

15. Lubricate the threads of the installer tool (2) with the driver oil (1).

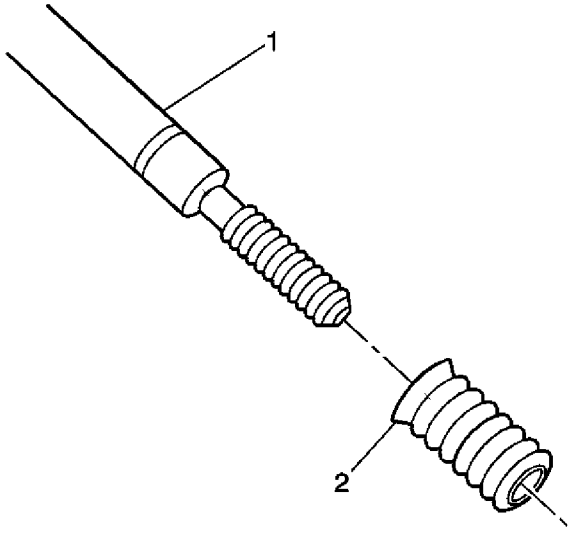

16. Install the insert (2) onto the driver tool (1).

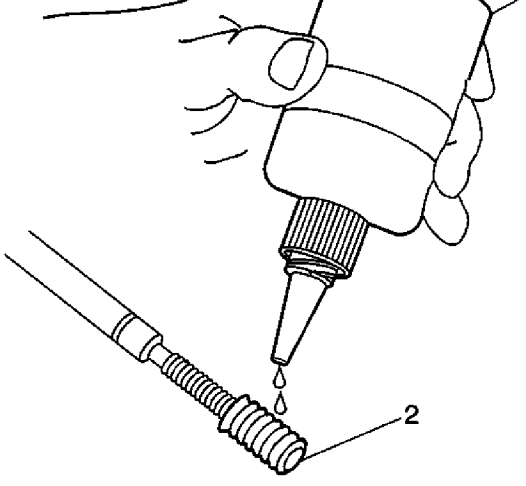

17. Apply threadlock LOCTITE™ 277, *J 42385-109* loctite (1), or equivalent to the insert OD threads (2).

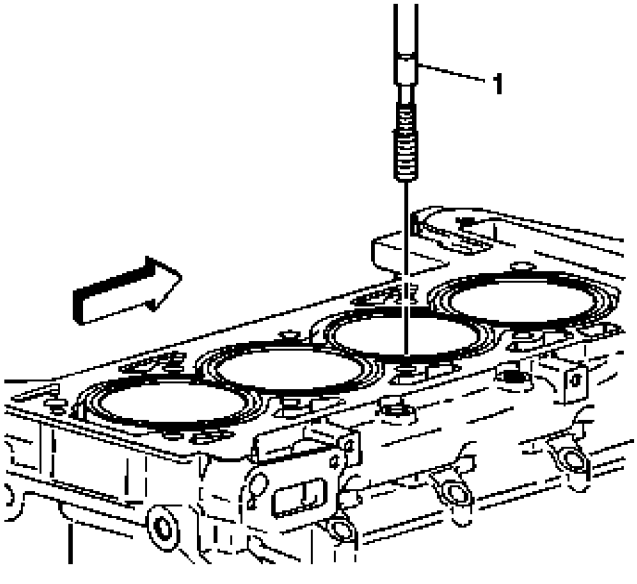

18. Install the insert and driver (1) into the hole.

    Rotate the driver tool until the mark on the tool aligns with the deck surface of the engine block.

    The installer tool will tighten up before screwing completely through the insert. This is acceptable. You are forming the bottom threads of the insert and mechanically locking the insert to the base material threads.

Main Cap Bolt Hole Thread Repair

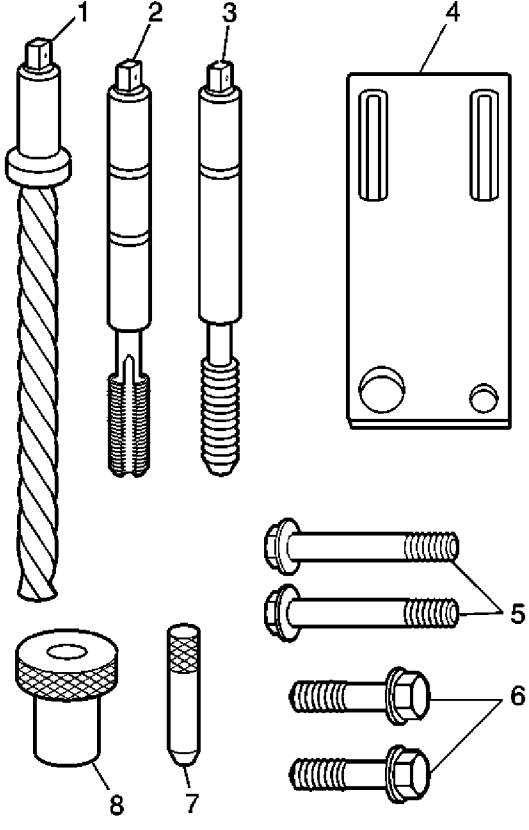

1. The main cap bolt hole thread repair kit consists of the following items:
   - Drill (1)
   - Tap (2)
   - Installer (3)
   - Fixture Plate (4)
   - Long Bolts (5)
   - Short Bolts (6)
   - Alignment Pin (7)
   - Bushing (8)

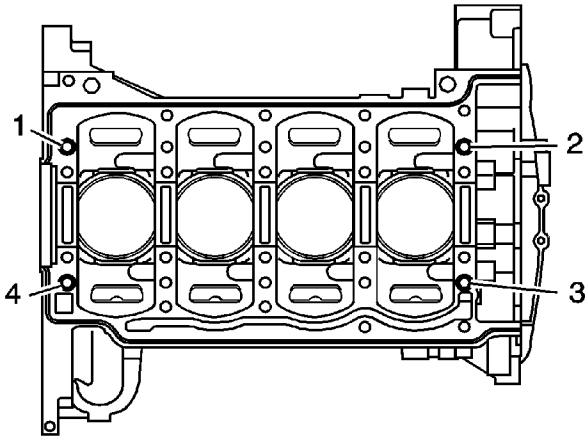

2. Remove the alignment dowel pins from the holes (1-4), if necessary.

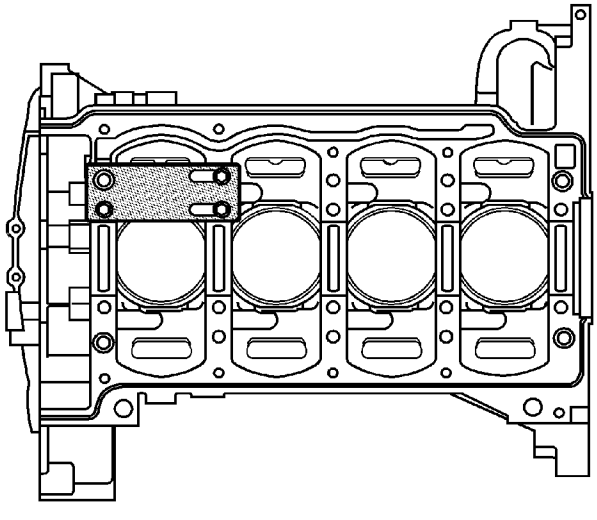

3. Install the fixture plate, bolt, and bushing, onto the engine block.

   Position the fixture plate and bushing over the hole that is to be repaired.

4. Position the alignment pin in the desired hole and tighten the fixture retaining bolts.
5. Drill out the damaged hole.

   Warning: Refer to Safety Glasses and Compressed Air Warning in the Preface section.

6. Using compressed air, clean out any chips.

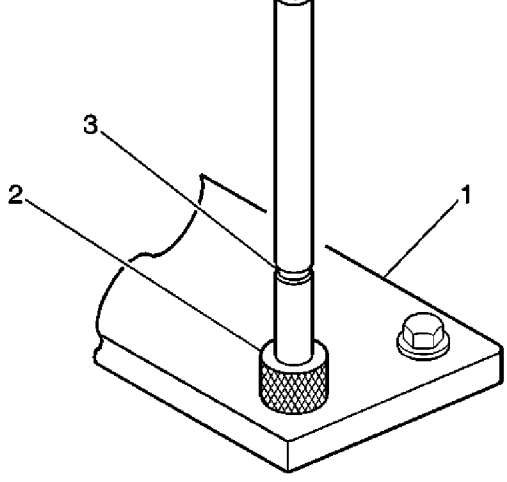

7. Using a tap wrench, tap the threads of the drilled hole.

   In order to tap the new threads to the proper depth, rotate the tap into the hole until the mark (3) on the tap aligns with the top of the bushing (2).

   Warning: Refer to Safety Glasses and Compressed Air Warning in the Preface section.

   Warning: Refer to Cleaning Solvent Warning in the Preface section.

8. Using compressed air, clean out any chips.
9. Spray cleaner GM P/N 12346139 (Canadian P/N 10953463) or equivalent, into the hole.
10. Using compressed air, clean any cutting oil and chips out of the hole.

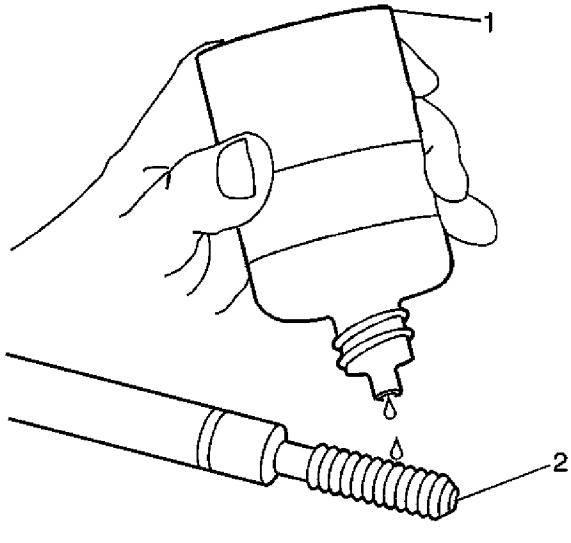

11. Lubricate the threads of the installer tool (2) with the driver oil (1).

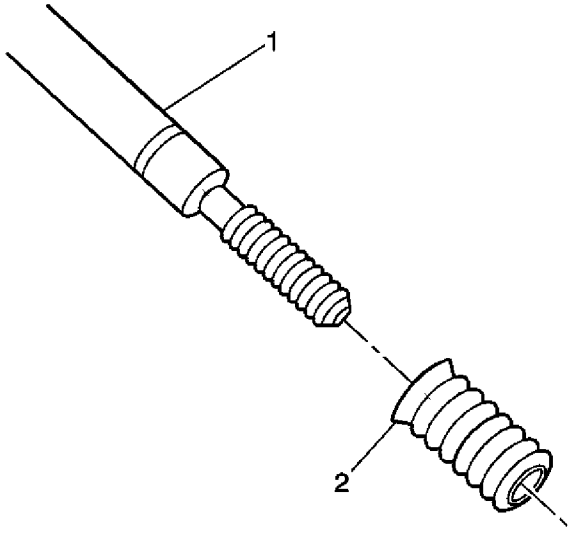

12. Install the insert (2) onto the driver tool (1).

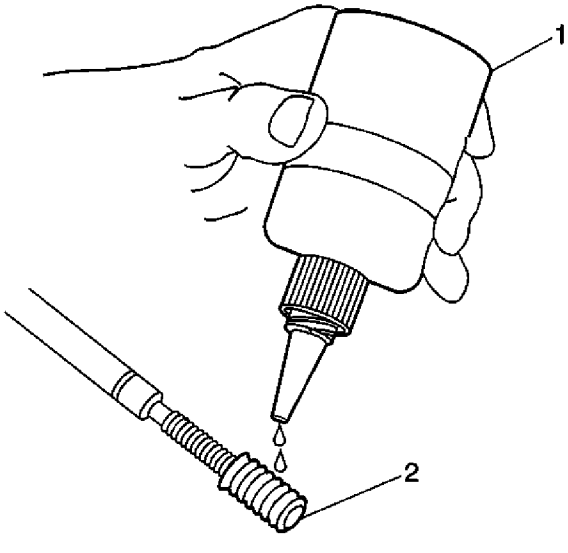

13. Apply threadlock LOCTITE™ 277, J 42385-109 (1), or equivalent to the insert OD threads (2).

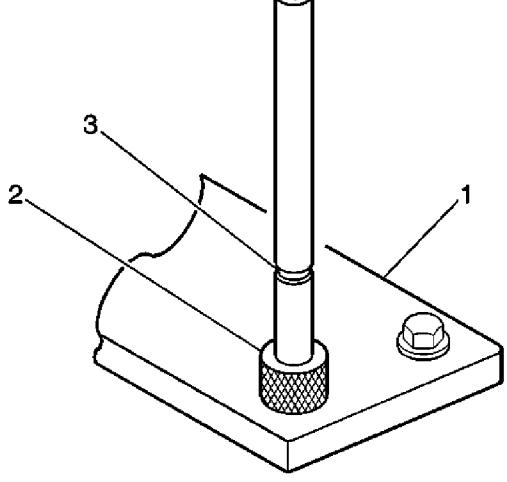

Note: The fixture plate and bushing remains installed onto the engine block during the insert installation procedure.

14. Install the insert and driver through the bushing (2), fixture plate (1) and into the hole.

    Rotate the driver tool until the mark on the tool (3) aligns with the top of the bushing (2).

    The installer tool will tighten up before screwing completely through the insert. This is acceptable. You are forming the bottom threads of the insert and mechanically locking the insert to the base material threads.

15. Remove the driver, bushing (2), fixture plate (1), and bolts.

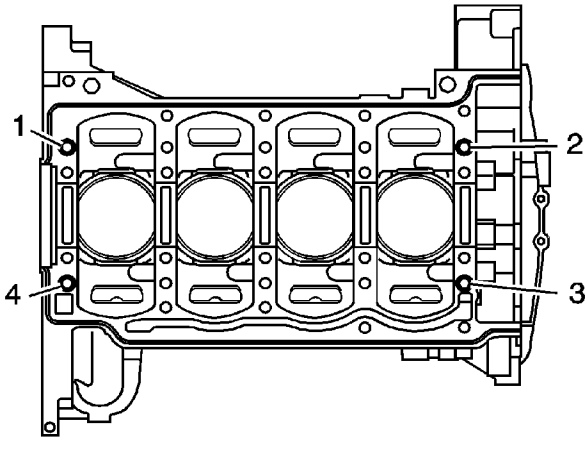

Service Prior to Assembly

The importance of cleanliness during assembly cannot be overstated. Dirt or debris will cause engine damage. An automobile engine is a combination of many machined, honed, polished and lapped surfaces with tolerances that are measured in ten thousandths of an inch. When any internal engine parts are serviced, care and cleanliness are important. A liberal coating of engine oil should be applied to friction areas during assembly in order to protect and lubricate the surfaces on initial operation. Throughout this section, it should be understood that proper cleaning and protection of machined surfaces and friction areas are part of the repair procedure. This is considered standard shop practice even if not specifically stated.

Lubricate all moving parts with engine oil or a specified assembly lubricant. This will provide lubrication for initial start up.

Engine Block Assemble

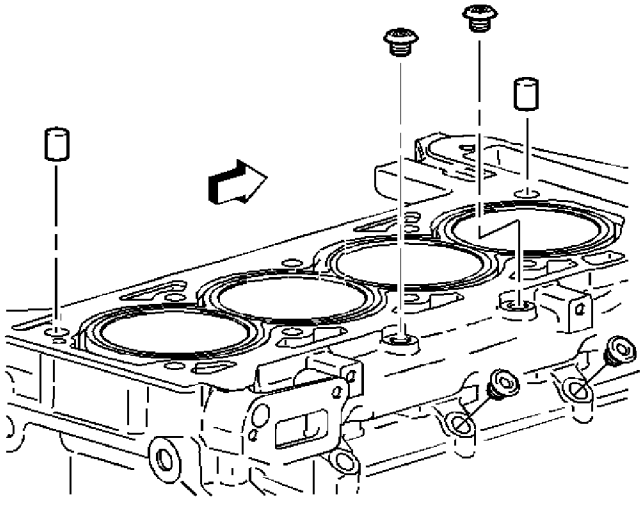

1. Install the drain plug in the water pump.
2. Apply GM P/N 12346004 (Canadian P/N 10953480) or equivalent to the plug before installation.

   Caution: Refer to Fastener Caution in the Preface section.

3. Install the coolant jacket plugs and tighten to **35 N·m (26 lb ft)**.
4. Apply GM P/N 12346004 (Canadian P/N 10953480) or equivalent to the plugs before installation.
5. Install the rear oil passage plugs and tighten to **60 N·m (44 lb ft)**.
6. Apply GM P/N 12346004 (Canadian P/N 10953480) or equivalent to the plug before installation.
7. Install the other oil passage plugs and tighten to **35 N·m (26 lb ft)**.

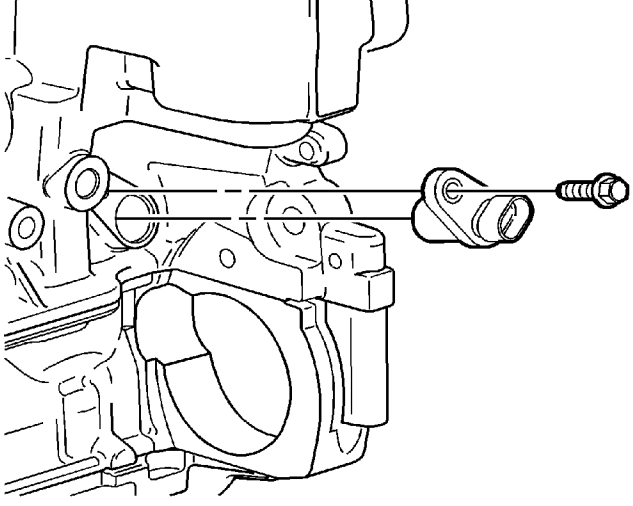

8. Lubricate the crankshaft position sensor O-ring with engine oil.
9. Install the crankshaft position sensor and bolt and tighten to **10 N·m (89 lb in)**.

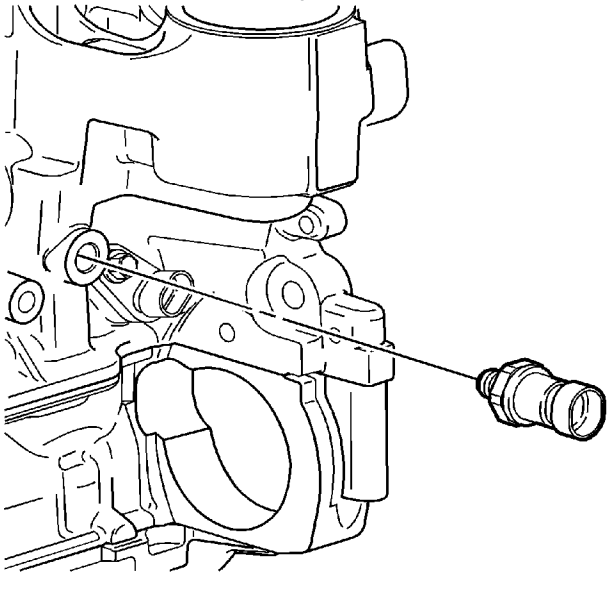

10. Install the oil pressure switch and tighten to **26 N·m (19 lb ft)**.

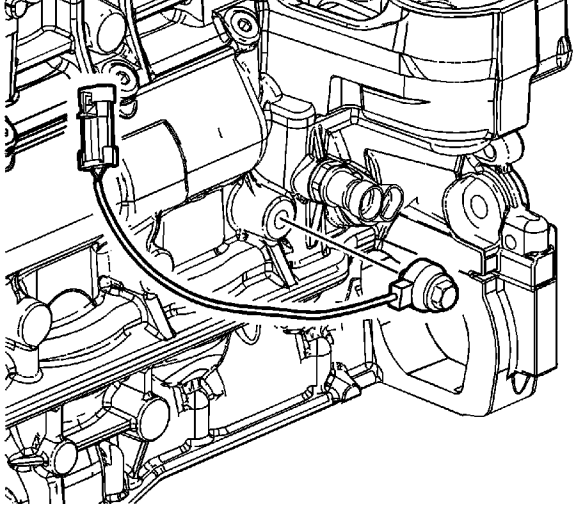

11. Install the knock sensor and bolt and tighten to **25 N·m (18 lb ft)**.

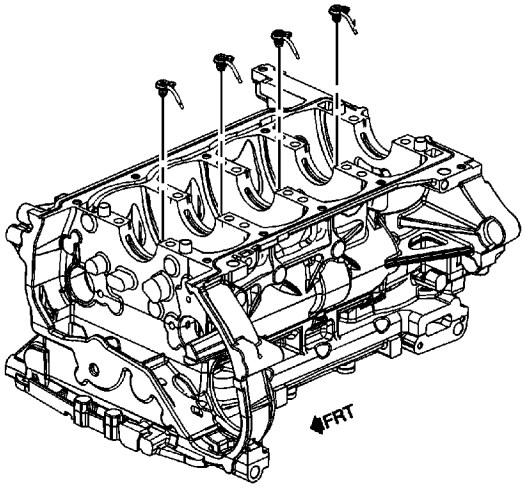

12. Install the piston oil nozzle assemblies, if equipped.
13. Install the piston oil nozzle assembly bolts and tighten to **15 N·m (11 lb ft)**.

Crankshaft and Bearing Installation

Special Tools

- *EN-8087* Cylinder Bore Checking Gage
- *J 45059* Angle Meter

For equivalent regional tools, refer to Special Tools.

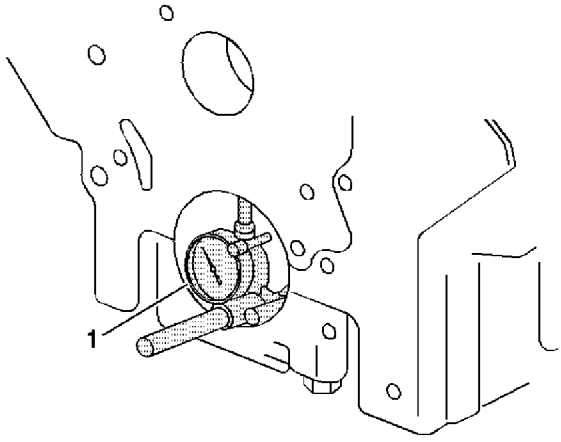

Note: If crankshaft bearing failure is due to other than normal wear, investigate the cause. Inspect the crankshaft or connecting rod bearing bores.

Inspect the connecting rod bearing bores or crankshaft main bearing bores using the following procedure:

- Tighten the bedplate to specification using the *J 45059* meter .
- Measure the bearing bore for taper and out-of-round using the *EN-8087* gage (1).
- No taper or out-of-round should exist.

Bearing Selection

1. Measure the bearing clearance to determine the correct replacement bearing insert size. There are 2 methods to measure bearing clearance. Method A gives more reliable results and is preferred.
   - Method A yields measurement from which the bearing clearance can be computed.

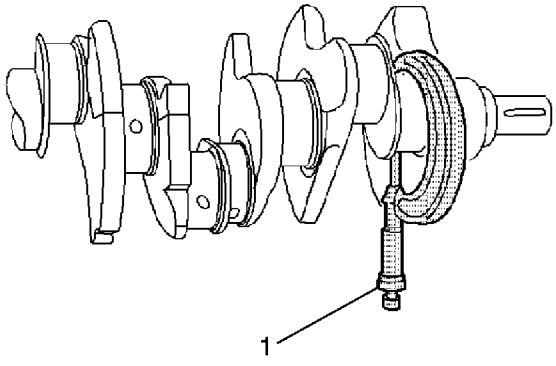

Note: Do not mix inserts of different nominal size in the same bearing bore.

2. To measure bearing clearance using Method A, use the following procedure:
   2.1. Measure the crankshaft bearing journal diameter with a micrometer (1) in several places, 90 degrees apart. Average the measurements.
   2.2. Measure the crankshaft bearing journal taper and runout.
   2.3. Install the lower crankcase and tighten the bearing cap bolts to specification.
   2.4. Measure bearing inside diameter (ID) in several places 90 degrees apart, average measurements.
   2.5. Subtract journal measurement from bearing ID measurement to determine clearance.
   2.6. Determine whether clearance is within specification.
   2.7. If out of specification, choose different inserts.
   2.8. Measure the connecting rod inside diameter in the same direction as the length of the rod with an inside micrometer.
   2.9. Measure the crankshaft main bearing inside diameter with an inside micrometer.

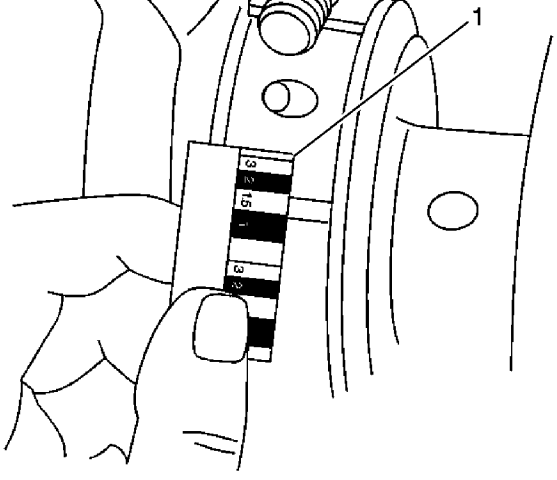

3. To measure bearing clearance using Method B, use the following procedure:
   3.1. Clean the used bearing inserts.
   3.2. Install the used bearing inserts.
   3.3. Place a piece of gaging plastic across the entire bearing width.
   3.4. Install the bearing caps.

Caution: In order to prevent the possibility of cylinder block or crankshaft bearing cap damage, the crankshaft bearing caps are tapped into the cylinder block cavity using a brass, lead, or a leather mallet before the attaching bolts are installed. Do not use attaching bolts to pull the crankshaft bearing caps into the seats. Failure to use this process may damage a cylinder block or a bearing cap.

   3.5. Install the bearing cap bolts to specification.

Note: Do not rotate the crankshaft.

   3.6. Remove the bearing cap, leaving the gaging plastic in place. It does not matter whether the gaging plastic adheres to the journal or to the bearing cap.
   3.7. Measure the gaging plastic at its widest point with the scale (1) printed on the gaging plastic package.
   3.8. Remove the gaging plastic.

Lower Crankcase Installation

Special Tools

J 45059 Angle Meter

For equivalent regional tools, refer to Special Tools.

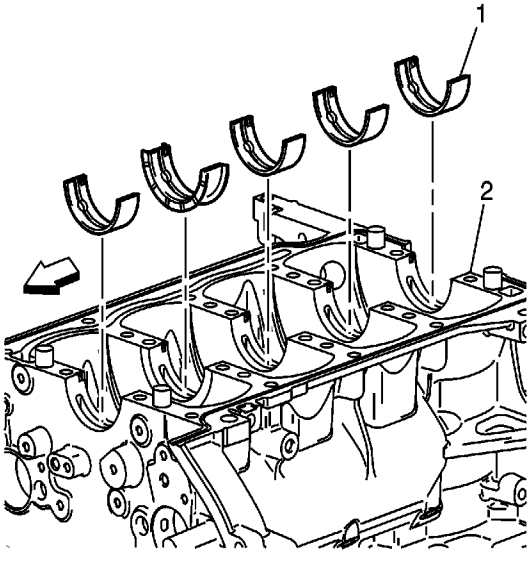

1. Install the upper crankshaft bearings (1) and lubricate bearing surfaces with engine oil.

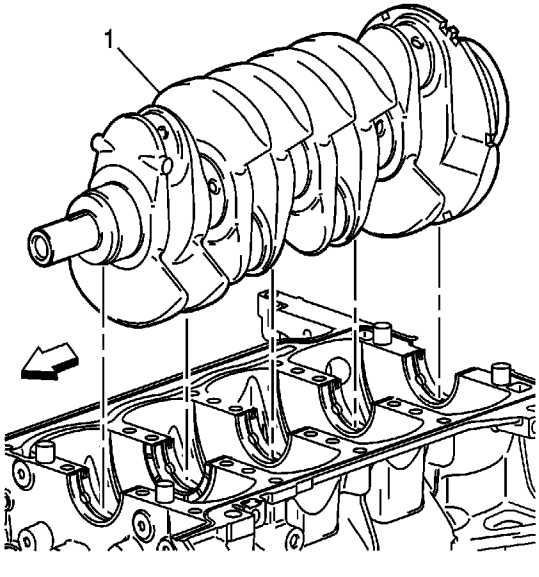

2. Install the crankshaft (1) on the journals.

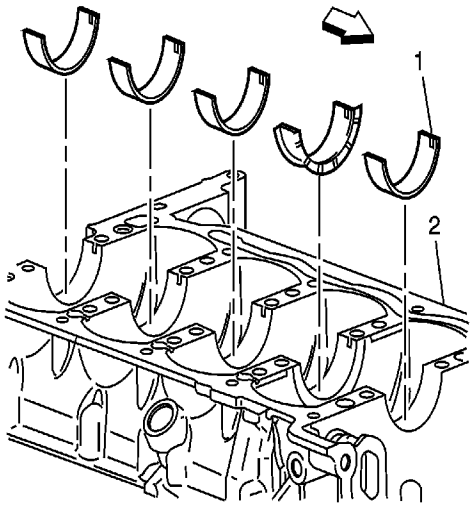

3. Install the lower bearing halves (1), without grooves, into the lower crankcase. Apply oil to bearing surfaces.

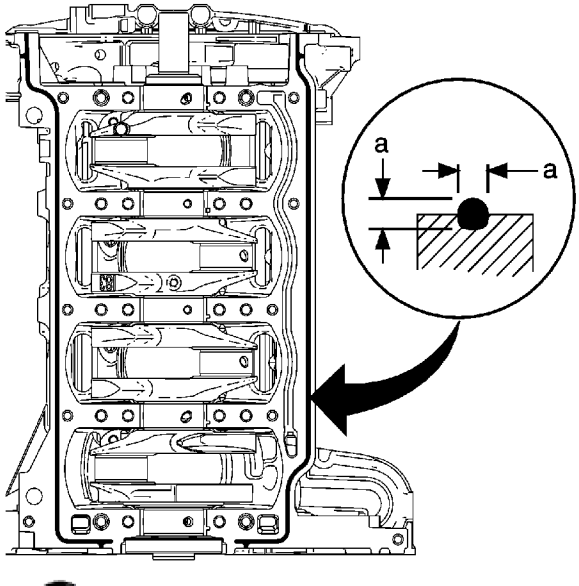

Note:

- The block assembly surface must be free of contamination prior to applying the sealer.
- Install and align the bedplate to block within 20 minutes of applying the sealer.
- The bedplate must be fastened to final torque specification within 60 minutes of applying the sealer.

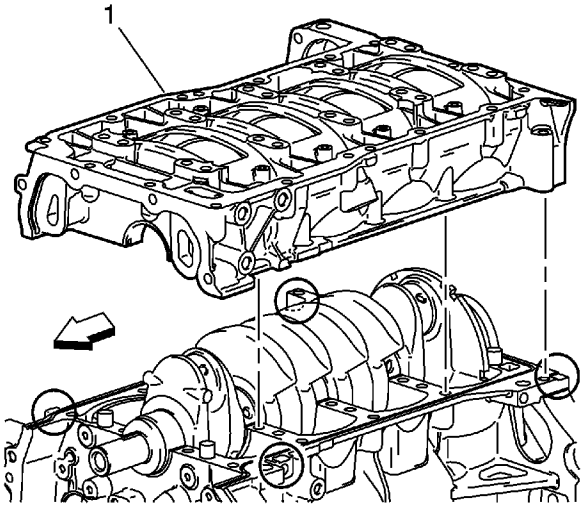

5. Install the lower crankcase (1). Tap gently into place with a suitable tool if necessary. Ensure it is aligned properly on the dowels.

   Caution: Refer to Fastener Caution in the Preface section.

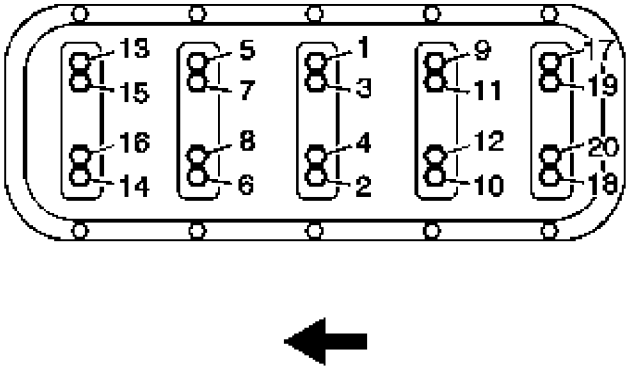

6. Install the NEW crankshaft bearing bolts in sequence finger tight.
   6.1. Tighten the crankshaft bearing bolts in sequence to **20 N·m (15 lb ft)**.
   6.2. Tighten the crankshaft bearing bolts in sequence using the *J 45059* meter an additional 70 degrees.

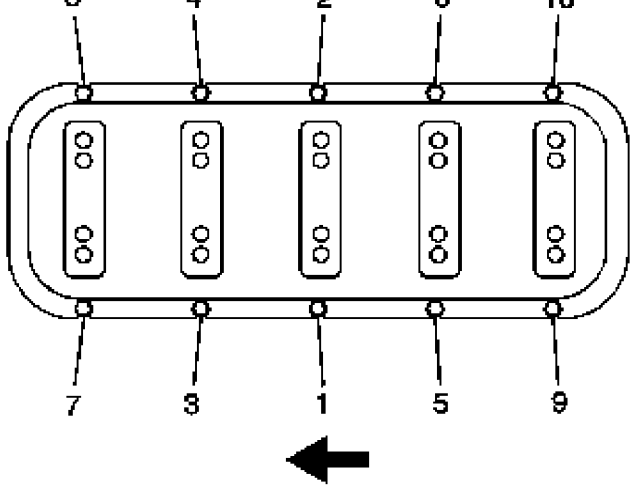

7. Tighten the lower crankcase perimeter bolts in sequence to **25 N·m (18 lb ft)**.

Crankshaft Rear Oil Seal Installation

Tools Required

J 42067 Rear Main Seal Installer

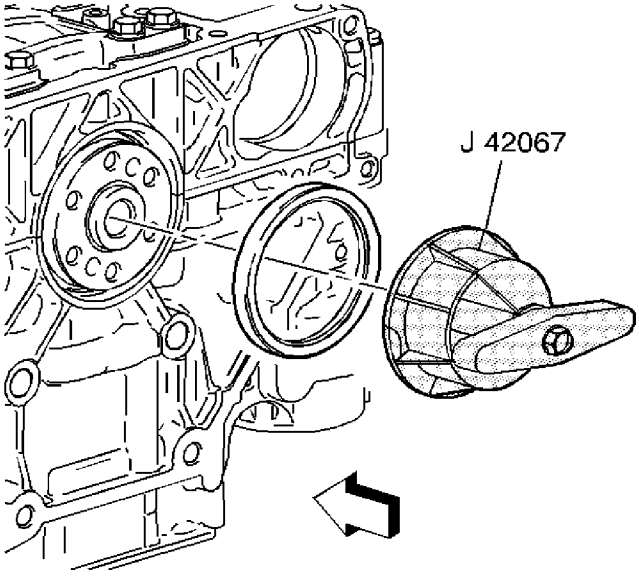

1. Remove excess sealer from seal recess.
2. Lubricate the outside diameter of the new crankshaft seal with clean engine oil.
3. Using the J 42067 , press the new crankshaft seal into the housing. The J 42067 also establishes the depth of the seal in the crankshaft seal bore.

Piston, Connecting Rod, and Bearing Installation (2.4L)

Special Tools

- *EN-43966-1* Connecting Rod Guides
- *J 45059* Angle Meter
- *EN-47836* Piston Ring Compressor

For equivalent regional tools, refer to Special Tools.

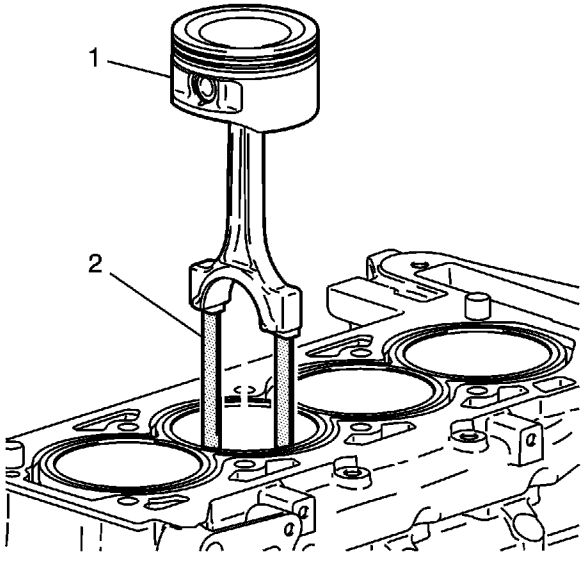

1. Install the connecting rod bearings. Use NEW bearings.
   1.1. Install the bearing inserts into the connecting rod and the connecting rod cap.
   1.2. Lubricate the connecting rod bearings with engine oil.
2. Install the *EN-43966-1* guides (1) into the connecting rod bolt holes. This protects the crankshaft journal during piston and connecting rod installation.
3. Install *EN-47836* compressor , piston, and the connecting rod to the correct bore.
   3.1. Stagger each piston ring end gap equally around the piston.
   3.2. Lubricate the piston and the piston rings with engine oil.
   3.3. Do not disturb the piston ring end gap location.
   3.4. The piston must be installed so that the mark on the top of the piston faces the front of the engine.
   3.5. Place the piston in its matching bore.
   3.6. Tap the piston into its bore with a hammer handle. Guide the connecting rod to the connecting rod journal while tapping the piston into place.
   3.7. Hold the *EN-47836* compressor against the engine block until all the rings have entered

3.8. Remove the connecting rod guides from the connecting rod bolt holes.

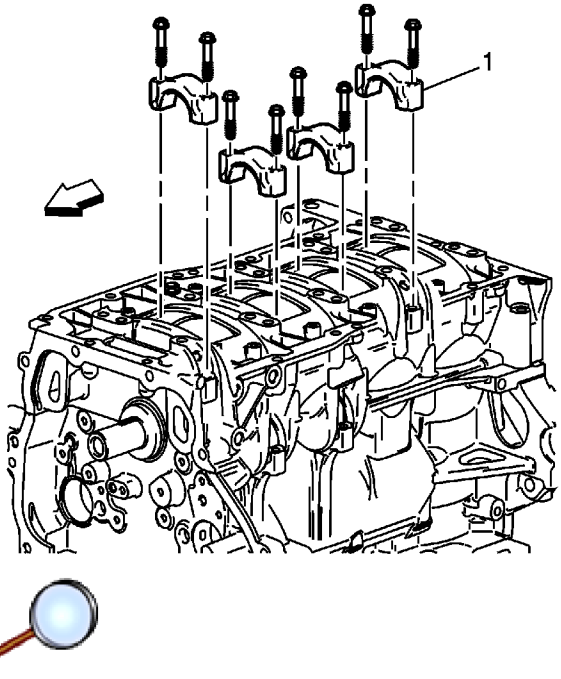

Note: Ensure that the connecting rod cap is properly oriented on the connecting rod.

4. Install the connecting rod cap (1).

Caution: Refer to Fastener Caution in the Preface section.

5. Install the connecting rod bolts. Always use new bolts. Tighten the connecting rod bolts to **25 N·m (18 lb ft)** , plus 100 degrees using the *J 45059* meter .
6. Install the remaining connecting rods and piston assemblies.

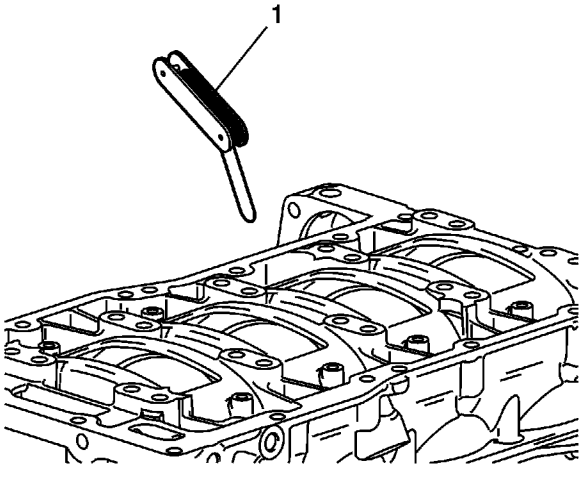

7. Measure the connecting rod side clearance with a feeler gage (1).

   The correct clearance is 0.07-0.37 mm (0.0027-0.0145 in).

Cylinder Head Installation

Special Tools

J 45059 Angle Meter

For equivalent regional tools, refer to Special Tools.

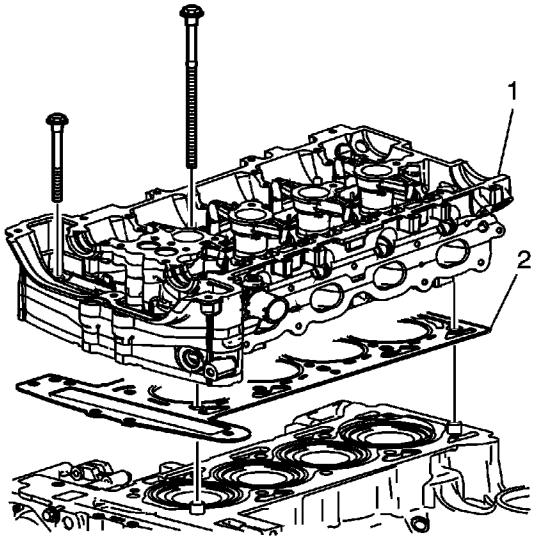

Note: Do not use any sealing material.

1. Install the cylinder head gasket (2) to the block.
2. Install the cylinder head (1).

Caution: Refer to Fastener Caution in the Preface section.

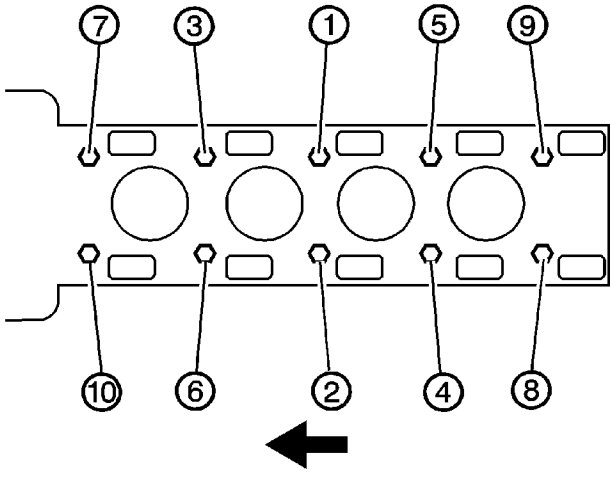

Note: Always use new cylinder head bolts.

3. Install and tighten the cylinder head bolts in sequence.
   - Tighten the bolts to **30 N·m (22 lb ft)**.
   - Using the *J 45059* meter , tighten the bolts an additional 155 degrees in sequence.

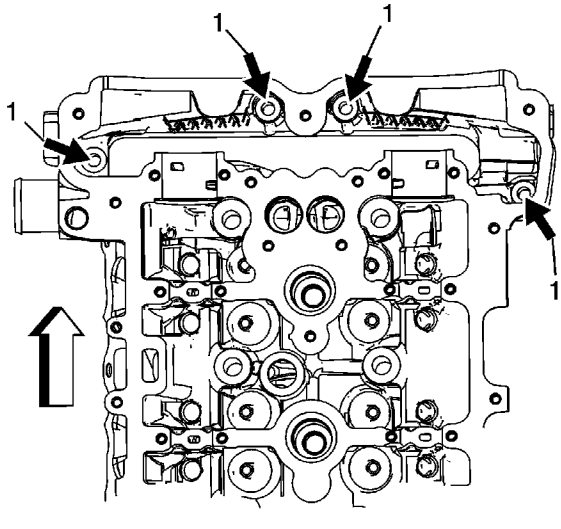

4. Install the front cylinder head bolts (1) and tighten to **35 N·m (26 lb ft)**.

Intake and Exhaust Camshaft, Bearing Cap, and Lash Adjuster Installation

Exhaust Camshaft Installation

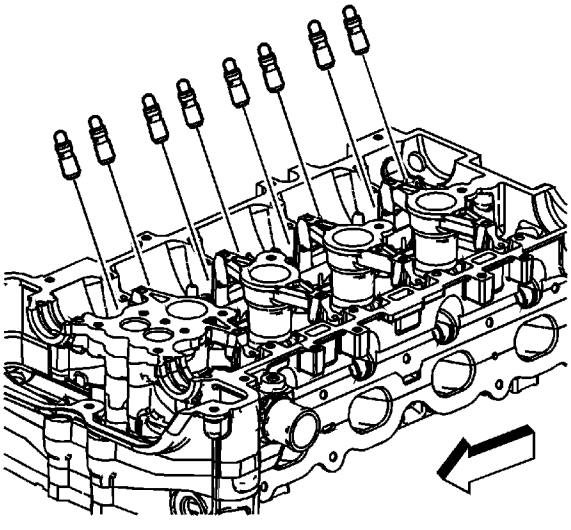

1. Install the hydraulic lash adjusters into their bores in the cylinder head. Apply lubricant GM P/N 12345501 (Canadian P/N 992704) or equivalent.

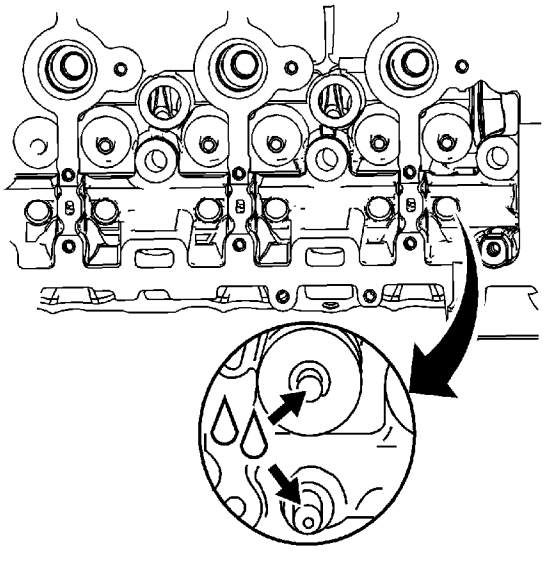

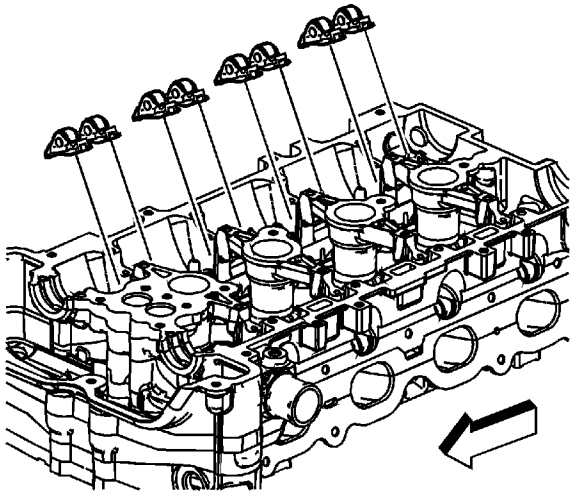

Note: Used roller followers must be returned to the original position on the camshaft. If the camshaft is being replaced, the roller followers actuated by the camshaft must also be replaced.

3. Position the roller followers on the tip of the valve stem and on the lash adjuster. Apply lubricant GM P/N 12345501 (Canadian P/N 992704) or equivalent.

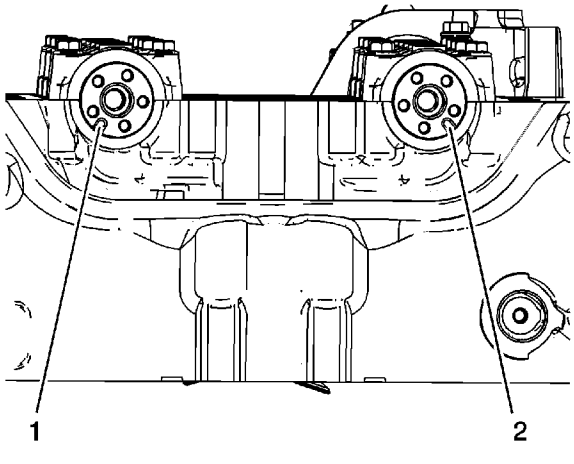

Note: The engine is timed top-dead center exhaust stroke.

4. When installing the camshafts, ensure the intake camshaft notch is in the 5 o'clock position (2) and the exhaust camshaft notch is in the 7 o'clock position (1). The number

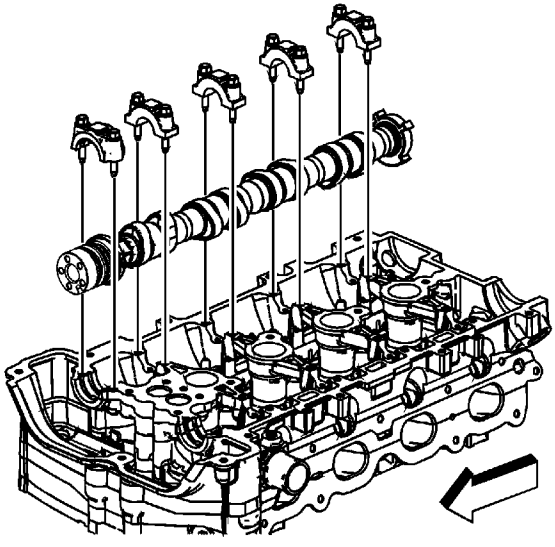

5. Set the exhaust camshaft on top of the roller followers in the camshaft bearing journals. Lubricate with GM P/N 12345501 (Canadian P/N 992704) or equivalent.
6. Install the camshaft caps and hand start the camshaft cap bolts.

   Caution: Refer to Fastener Caution in the Preface section.

7. Tighten the camshaft cap bolts in increments of 3 turns until they are seated, lubricate. Tighten the camshaft caps to **10 N·m (89 lb in)**.

Intake Camshaft Installation

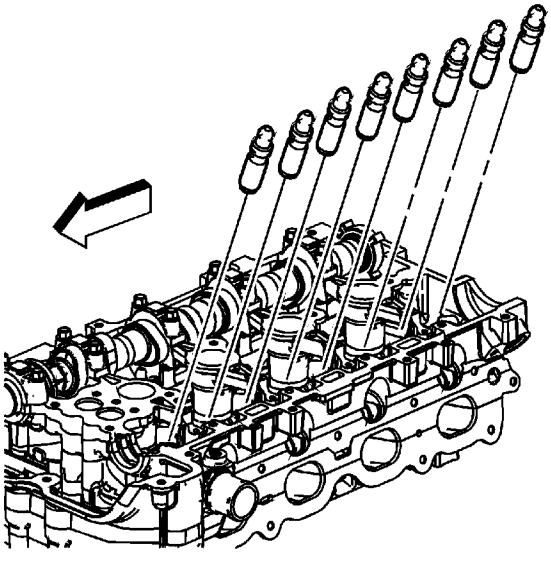

1. Install the hydraulic lash adjusters into their bores in the cylinder head.
2. Lubricate the hydraulic lash adjusters with GM P/N 12345501 (Canadian P/N 992704) or equivalent.

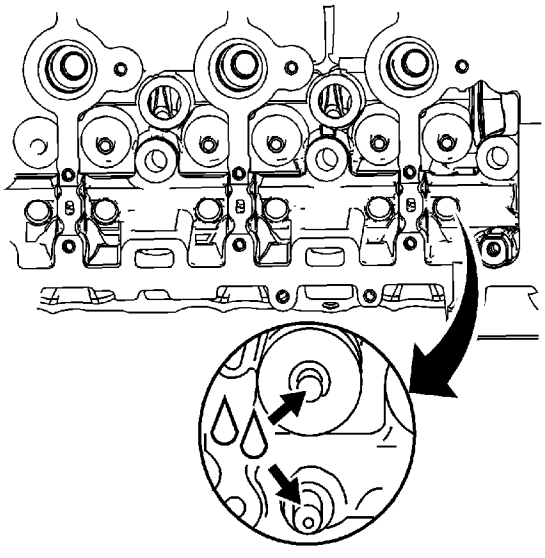

3. Lubricate the valve tips.

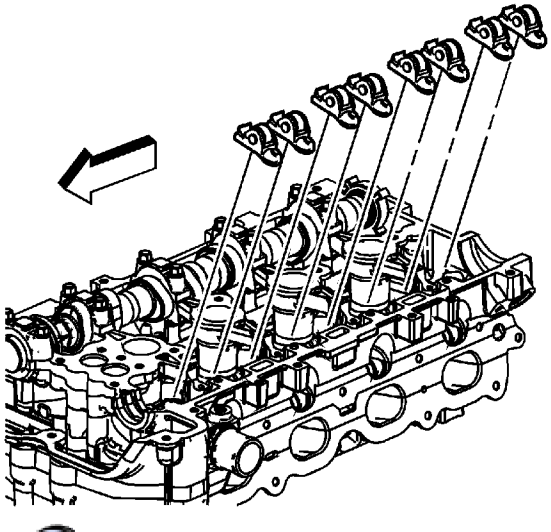

Note: Used roller followers must be returned to the original position on the camshaft. If the camshaft is being replaced, the roller followers actuated by the camshaft must also be replaced.

4. Position the roller followers on the tip of the valve stem and on the lash adjuster. Lubricate roller followers with GM P/N 12345501 (Canadian P/N 992704) or equivalent.

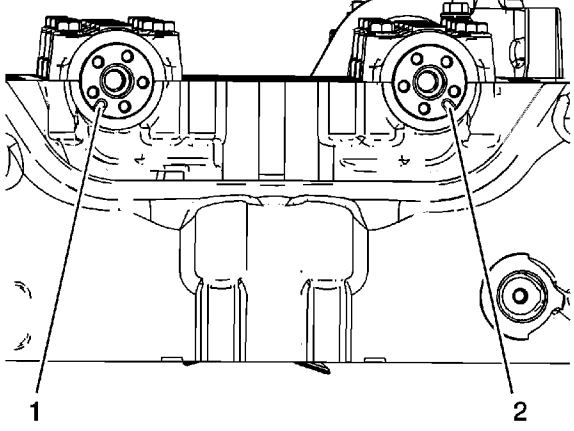

Note: The engine is timed top-dead center exhaust stroke.

5. When installing the camshafts, ensure the intake camshaft notch is in the 5 o'clock position (2) and the exhaust camshaft notch is in the 7 o'clock position (1). The number 1 piston should be at top dead center (TDC), crankshaft key at 12 o'clock.

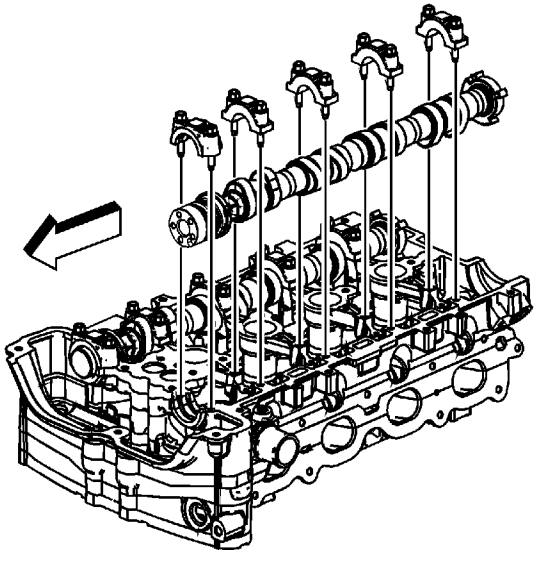

6. Set the intake camshaft on top of the roller followers in the camshaft bearing journals. Lubricate with GM P/N 12345501 (Canadian P/N 992704) or equivalent.
7. Install the camshaft caps and hand start the camshaft cap bolts.
8. Tighten the camshaft cap bolts in increments of 3 turns until they are seated. Tighten the camshaft caps to **10 N·m (89 lb in)**.

Balance Shaft Installation

Special Tools

EN-43650 Balance Shaft Bushing Remover/Installer

For equivalent regional tools, refer to Special Tools.

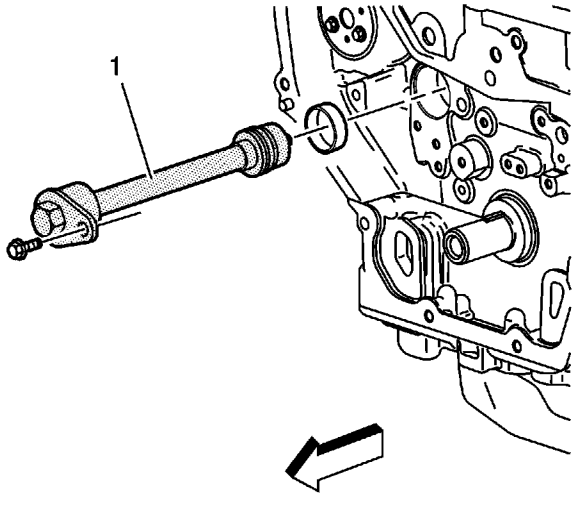

1. Install the balance shaft bushing using the *EN-43650* installer (1).

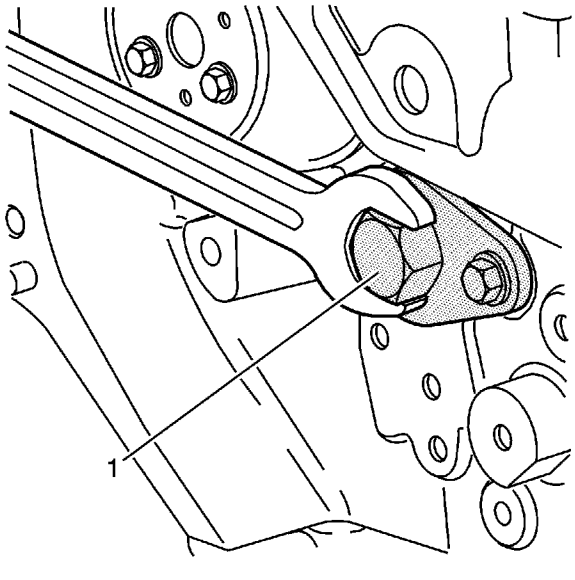

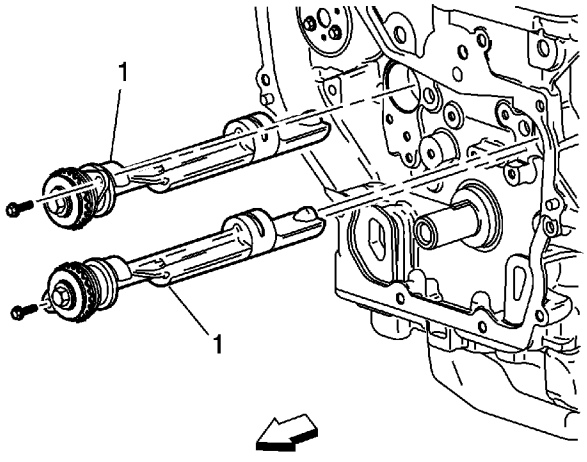

Note: If the balance shafts are not properly timed to the engine, the engine may vibrate or make noise.

4. Place the number one piston at top dead center (TDC).
5. Lubricate the balance shaft lobes with engine oil.
6. Install the balance shafts (1) into their bores.

Caution: Refer to Fastener Caution in the Preface section.

7. Install the balance shaft retaining bolts and tighten to **10 N·m (89 lb in)**.

Water Pump Installation

Prior to installing the water pump, read the entire procedure. Pay special attention to avoid part damage and to ensure proper sealing.

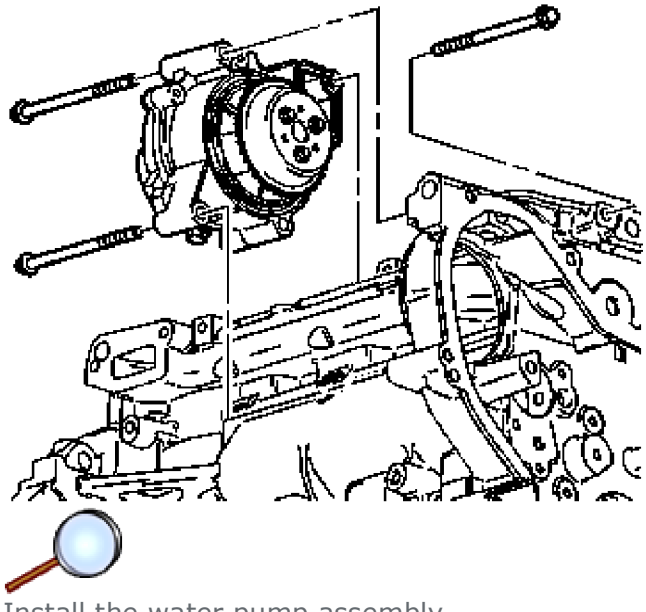

1. Install the water pump assembly.
2. Install the water pump bolts. Finger tighten the bolts.

   Caution: Refer to Fastener Caution in the Preface section.

3. Tighten the water pump bolts to **25 N·m (18 lb ft)**.
4. Apply sealant GM P/N 12346004 (Canadian P/N 10953480) or equivalent to the water pump drain plug.
5. Install the water pump drain plug, if necessary. Tighten to **20 N·m (15 lb ft)**.

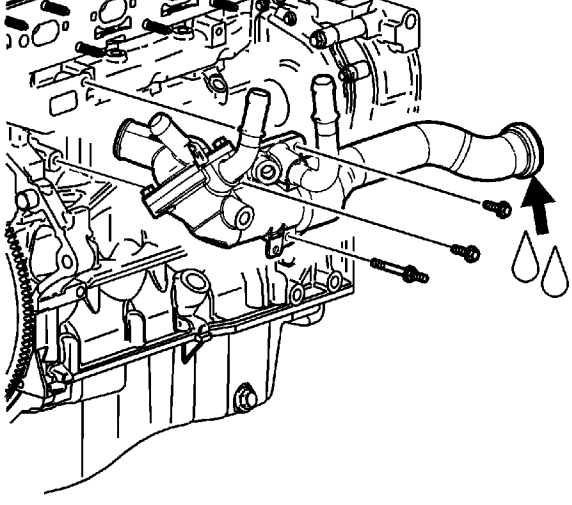

6. Install the water feed tube.
7. Lubricate the feed tube O-ring with antifreeze.
8. Install the water feed tube by twisting and pushing toward the water pump. Take care not to tear or damage the O-ring.
9. Install the thermostat housing to block bolts and stud and tighten to **10 N·m (89 lb in)**.

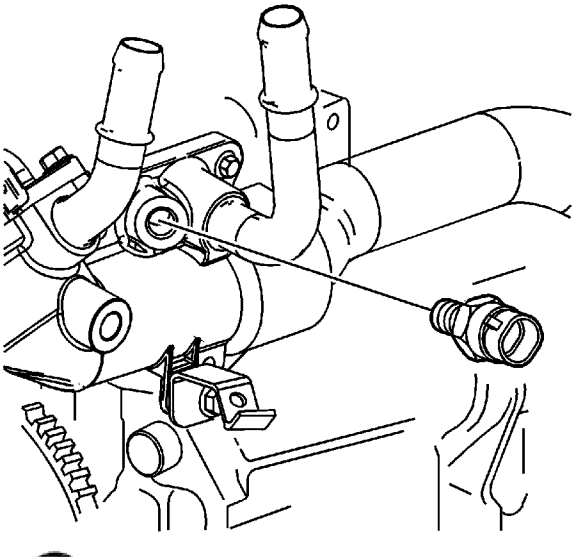

10. Install the engine coolant temperature sensor by hand.
11. Tighten the engine coolant temperature sensor and tighten to **20 N·m (15 lb ft)**.

Balance Shaft to Engine Timing

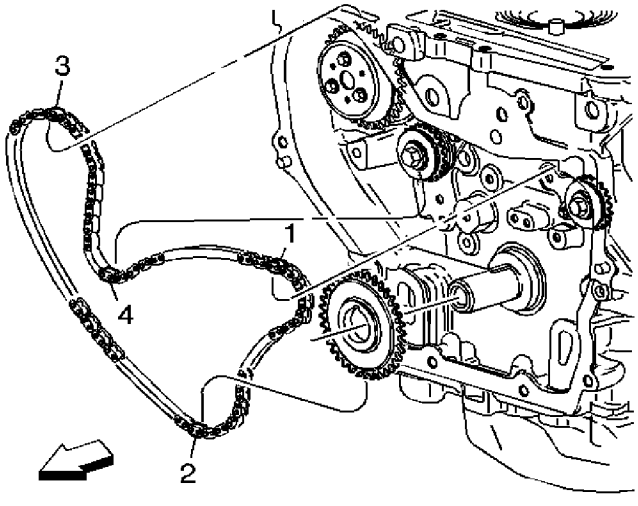

1. Install the balance shaft drive sprocket.

   Important: If the balance shafts are not properly timed to the engine, the engine may vibrate or make noise.

2. Install the balance shaft drive chain with the colored links lined up on with the marks on the balance shaft drive sprockets and the crankshaft sprocket. There are three colored links on the chain. Two links are of matching colors, and one link is of a unique color. Use the following procedure to line up the links with the sprockets:

   Orient the chain so that the colored links are visible.

3. Place the uniquely colored link (1) so that it lines up with the timing mark on the intake side balance shaft sprocket.
4. Working clockwise around the chain, place the first matching colored link (2) in line with the timing mark on the crankshaft drive sprocket. (approximately 6 o'clock position on the crank sprocket)
5. Place the chain (3) on the water pump drive sprocket. The alignment is not critical.
6. Align the last matching colored link (4) with the timing mark on the exhaust side balance shaft drive sprocket.

Water Pump and Balance Shaft Chain and Tensioner Installation

Caution: Refer to Fastener Caution in the Preface section.

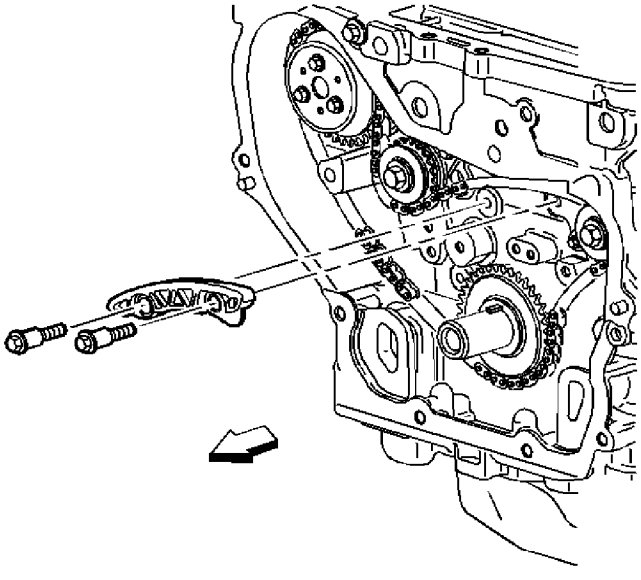

Note: If the balance shafts are not properly timed to the engine, the engine may vibrate and make noise.

1. Install the upper balance shaft chain guide and bolts and tighten to **15 N·m (11 lb ft)**.

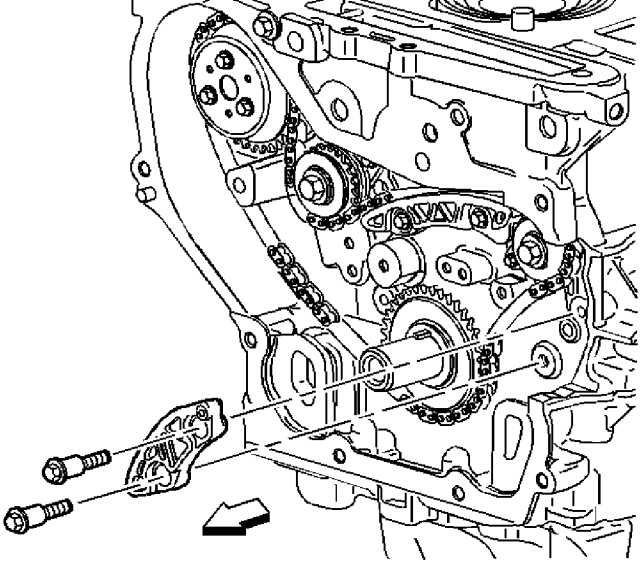

2. Install the small balance shaft chain guide.
3. Install the balance shaft chain guide bolts and tighten to **15 N·m (11 lb ft)**.

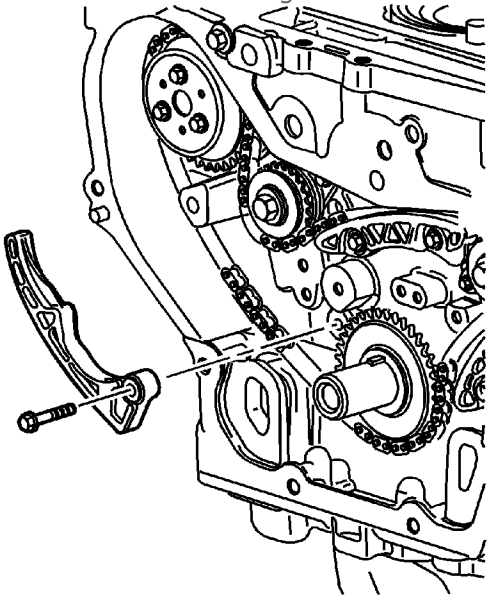

4. Install the adjustable balance shaft drive chain guide.
5. Install the adjustable balance shaft drive chain guide bolts and tighten to **10 N·m (89 lb in)**.

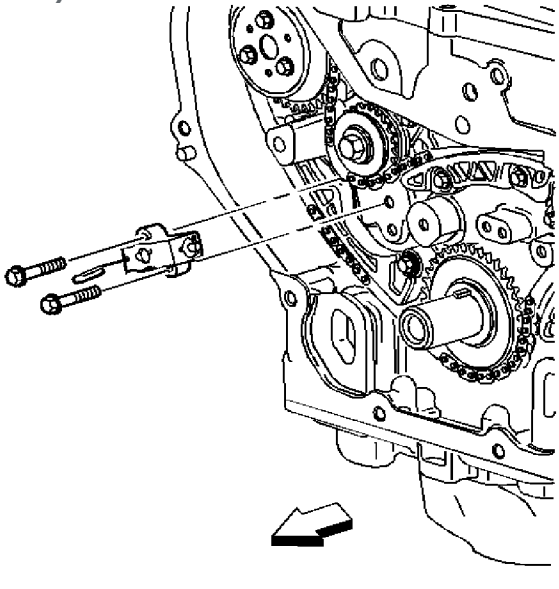

6. Reset the timing chain tensioner by performing the following steps:
   6.1. Turn the tensioner plunger 90 degrees in its bore and compress the plunger.
   6.2. Turn the tensioner back to the original 12 o'clock position and insert a paper clip through the hole in the plunger body and into the hole in the tensioner plunger.
7. Install the timing chain tensioner.

Camshaft Timing Chain, Sprocket, and Tensioner Installation

Special Tools

- *EN-45027* Tensioner Tool
- *J 45059* Angle Meter
- *EN-48953* Camshaft Actuator Locking Tool

For equivalent regional tools, refer to Special Tools.

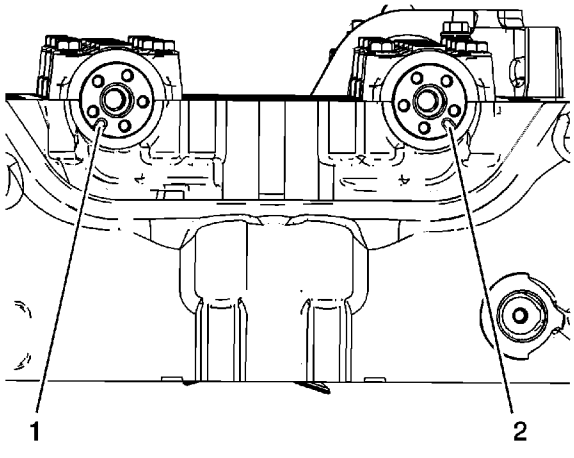

Note: The engine is timed top-dead center exhaust stroke.

1. Ensure the intake camshaft notch is in the 5 o'clock position (2) and the exhaust camshaft notch is in the 7 o'clock position (1). The number 1 piston should be at top dead center (TDC), crankshaft key at 12 o'clock.

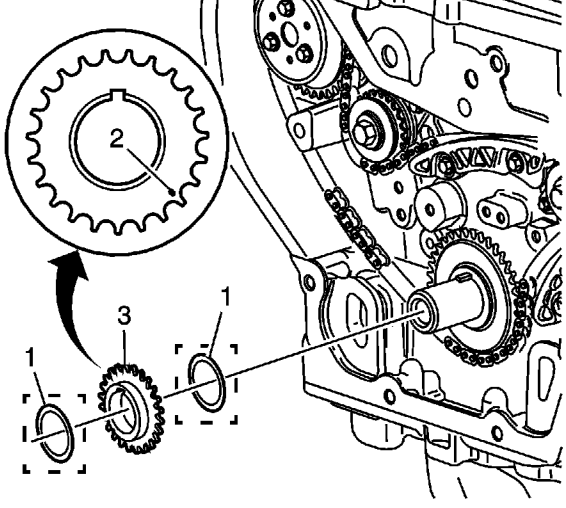

2. Install a friction washer (1), if equipped.
3. Install the timing chain drive sprocket (2) to the crankshaft with the timing mark in the 5 o'clock position and the front of the sprocket facing out.
4. Install a second friction washer (1), if equipped.

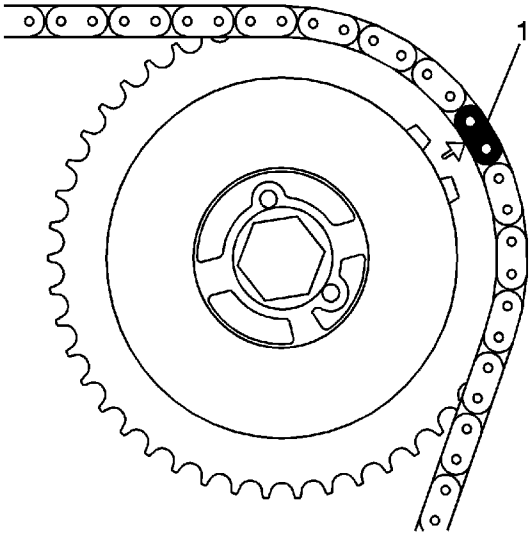

Note: There are three colored links on the timing chain. Two links are of matching color, and one link is of a unique color. Use the following procedure to line up the links with the actuators. Orient the chain so that the colored links are visible.

5. Assemble the intake camshaft actuator into the timing chain with the timing mark lined up with the uniquely colored link (1).

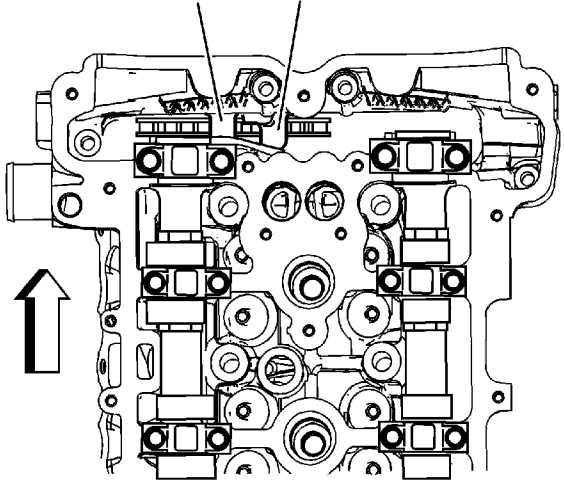

6. Lower the timing chain through the opening in the cylinder head. Use care to ensure that the chain goes around both sides of the cylinder block bosses (1, 2).
7. Install the intake camshaft actuator onto the intake camshaft while aligning the dowel pin into the camshaft slot.

   Note: Always use NEW actuator bolts.

8. Hand tighten the new intake camshaft actuator bolt.

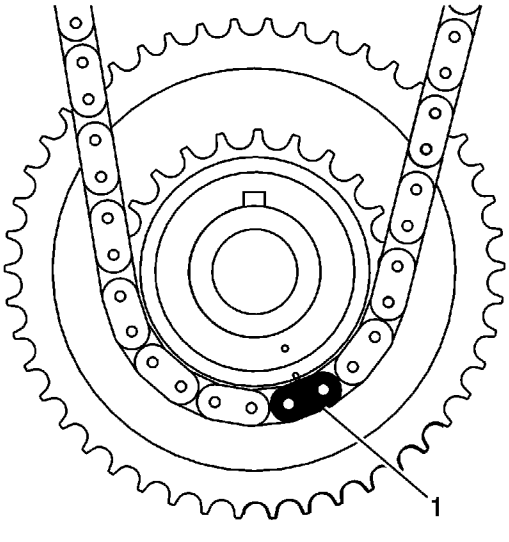

9. Route the timing chain around the crankshaft sprocket and line up the first matching colored link (1) with the timing mark on the crankshaft sprocket, in approximately the 5 o'clock position.

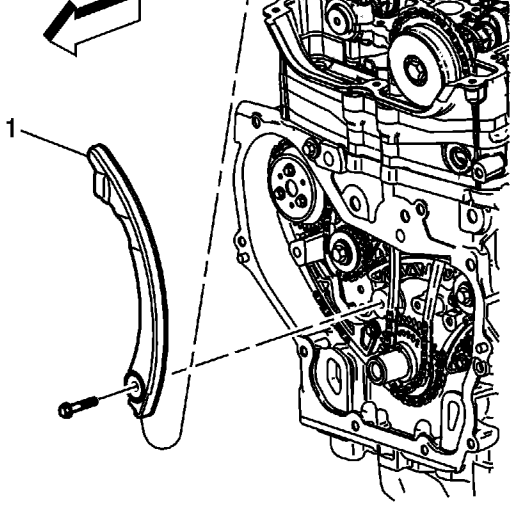

10. Rotate the crankshaft clockwise to remove all chain slack. Do not rotate the intake camshaft.

    Caution: Refer to Fastener Caution in the Preface section.

11. Install the adjustable timing chain guide (1) down through the opening in the cylinder head and install the adjustable timing chain bolt and tighten to **10 N·m (89 lb in)**.

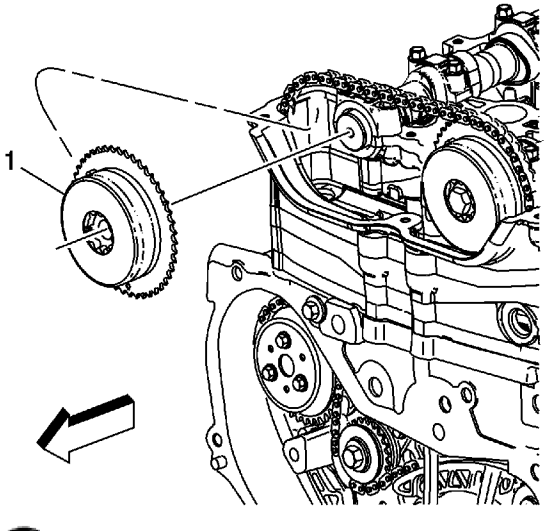

12. Install the exhaust camshaft actuator (1) into the timing chain with the timing mark lined up with the second matching colored link.

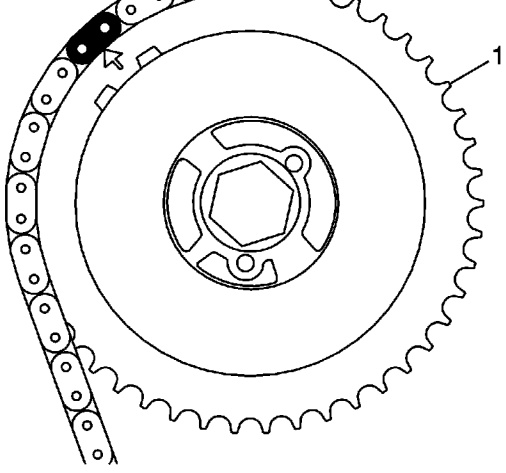

Note: Always install NEW actuator bolts.

13. Install the exhaust camshaft actuator (1) onto the exhaust camshaft, aligning the dowel pin into the camshaft slot.
14. Using a 23-24 mm open end wrench, rotate the exhaust camshaft clockwise until the dowel pin in the camshaft actuator goes into the camshaft slot.

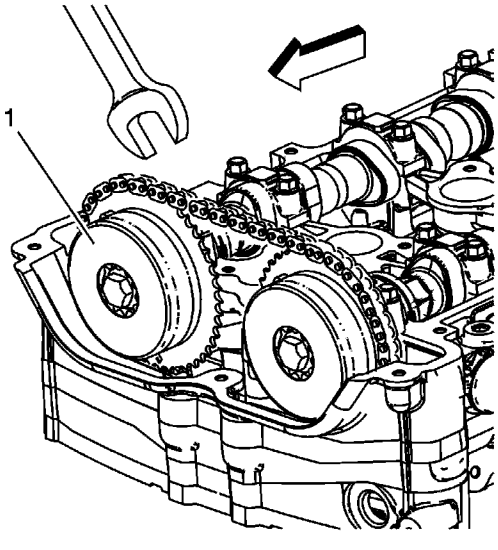

15. When the actuator (1) seats on the cam, tighten the new exhaust camshaft actuator bolt hand tight.
16. Verify that all of the colored links and the appropriate timing marks are still aligned. If they are not, repeat the portion of the procedure necessary to align the timing marks.

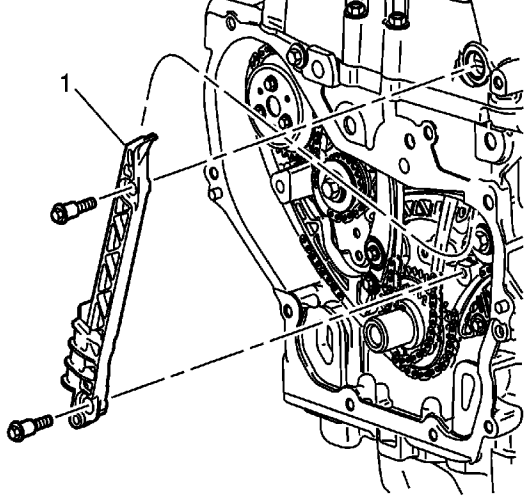

17. Install the fixed timing chain guide (1) and bolts and tighten to **12 N·m (106 lb in)**.

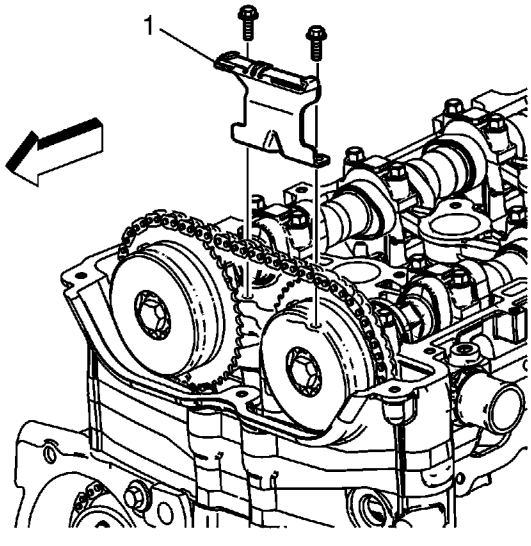

18. Install the upper timing chain guide (1) and bolts and tighten to **10 N·m (89 lb in)**.

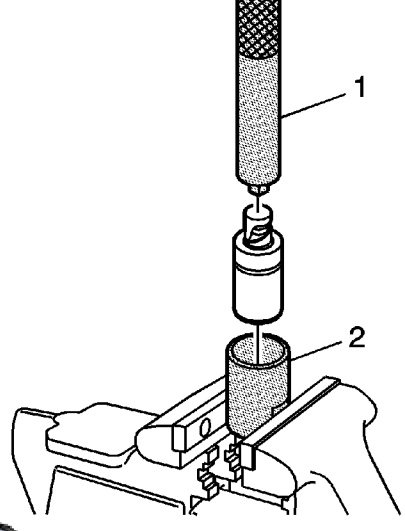

19. Reset the timing chain tensioner by performing the following steps:
    19.1. Remove the snap ring.
    19.2. Remove the piston assembly from the body of the timing chain tensioner.
    19.3. Install the *EN-45027-2 (2)* tensioner into a vise.
    19.4. Install the notch end of the piston assembly into the *J 45027-2 (2)* tensioner .
    19.5. Using the *EN-45027-1 (1)* tensioner , turn the ratchet cylinder into the piston.
    19.6. Reinstall the piston assembly into the body of the tensioner.
    19.7. Install the snap ring.

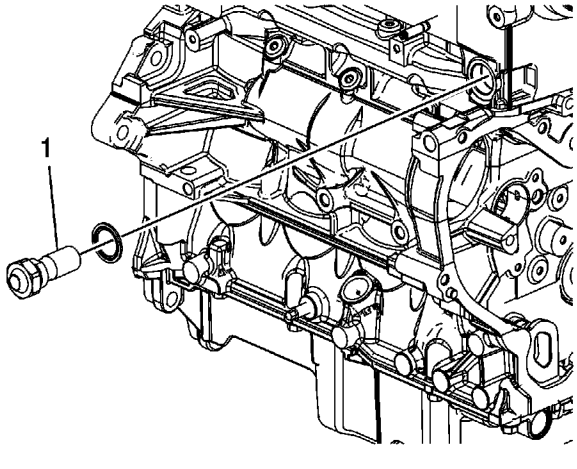

20. Inspect the timing chain tensioner seal for damage. If damaged, replace the seal.
21. Inspect to ensure all dirt and debris is removed from the timing chain tensioner threaded

Note: Ensure the timing chain tensioner seal is centered throughout the torque procedure to eliminate the possibility of an oil leak.

22. Install the timing chain tensioner assembly (1) and tighten to **75 N·m (55 lb ft)**.

    Note: The timing chain tensioner is released by compressing it 2 mm (0.079 in), which will release the locking mechanism in the ratchet.

23. The crankshaft balancer must be installed in order to release the tensioner. Refer to Crankshaft Balancer Installation.

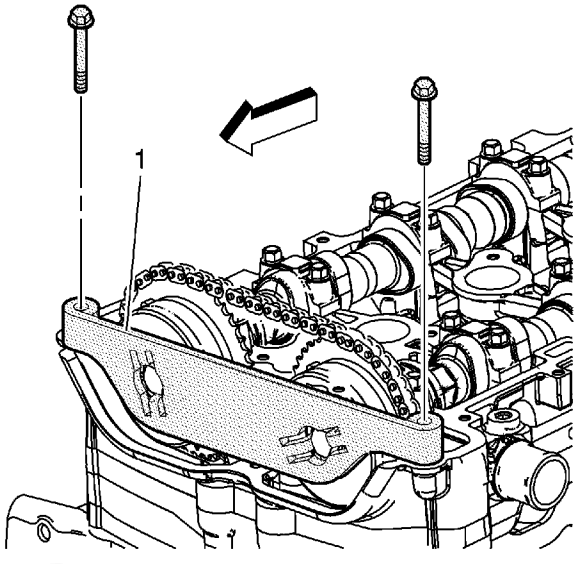

24. Install *EN-48953* locking tool (1) and tighten the bolts into the cylinder head to **10 N·m (89 lb in)**.
25. Using a torque wrench, tighten the camshaft actuator bolt to **30 N·m (22 lb ft)** , plus 100 degrees using the *J 45059* meter .
26. Using a torque wrench, tighten the camshaft actuator bolt to **30 N·m (22 lb ft)** , plus 100 degrees using the *J 45059* meter .
27. Remove *EN-48953* locking tool .

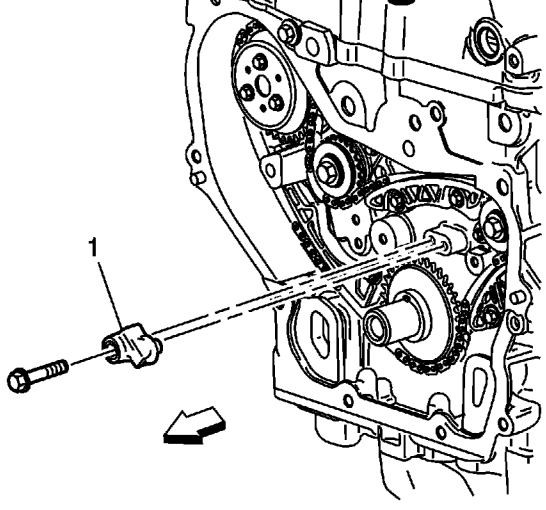

28. Install the timing chain oiling nozzle (1) and tighten the bolt to **10 N·m (89 lb in)**.

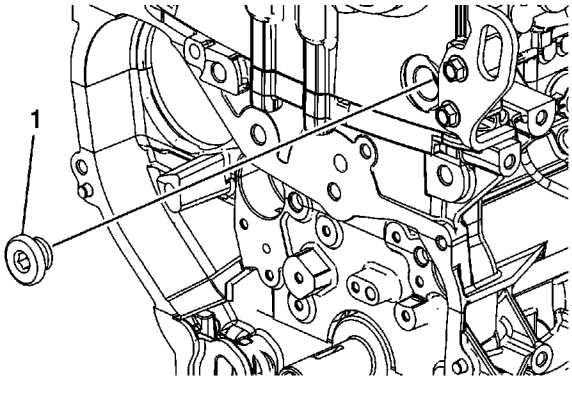

29. Apply sealant to the thread of the timing chain guide bolt access hole plug. Refer to Adhesives, Fluids, Lubricants, and Sealers.
30. Install the timing chain guide bolt access hole plug (1) and tighten to **90 N·m (66 lb ft)**.

Crankshaft Front Oil Seal Installation

Tools Required

J 35268-A Camshaft/Front Main Seal Installer

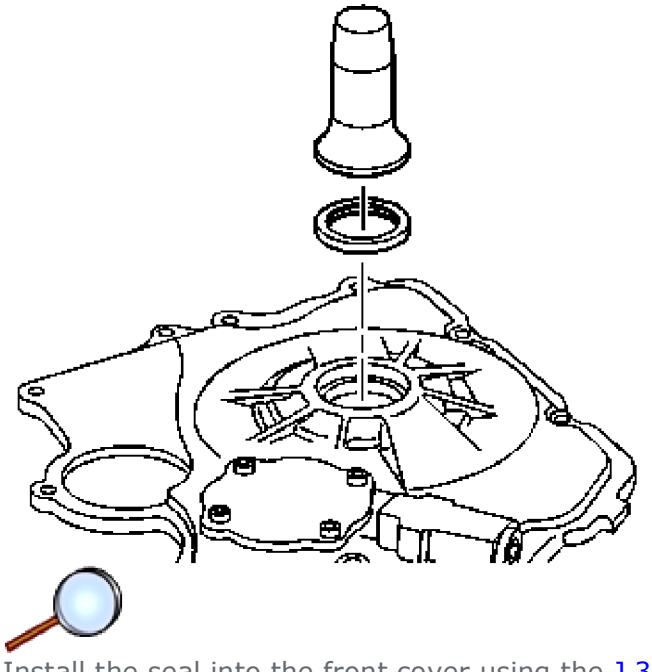

1. Install the seal into the front cover using the J 35268-A .
2. Ensure that the engine front cover is properly supported when installing the seal.

Engine Front Cover and Oil Pump Installation

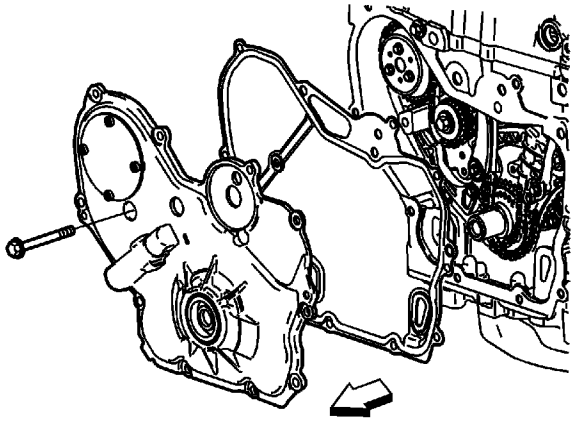

1. Install the engine front cover with a new gasket.

   Caution: Refer to Fastener Caution in the Preface section.

2. Install the long water pump bolt and tighten to **25 N·m (18 lb ft)**.

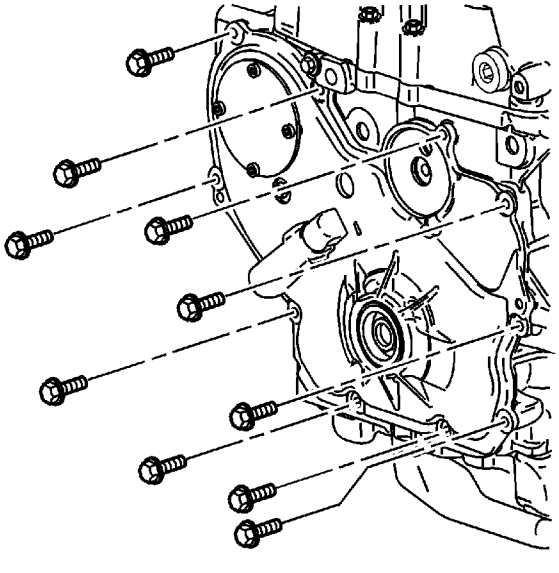

3. Install the engine front cover bolts and tighten to **25 N·m (18 lb ft)**.

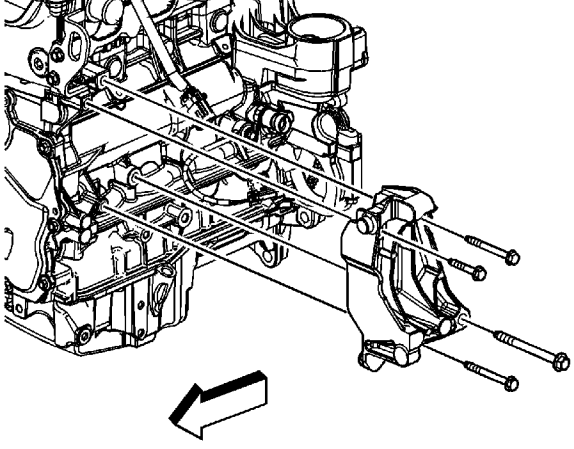

4. Install the drive belt tensioner bracket.
5. Install the drive belt tensioner bracket bolts and tighten to **45 N·m (33 lb ft)**.

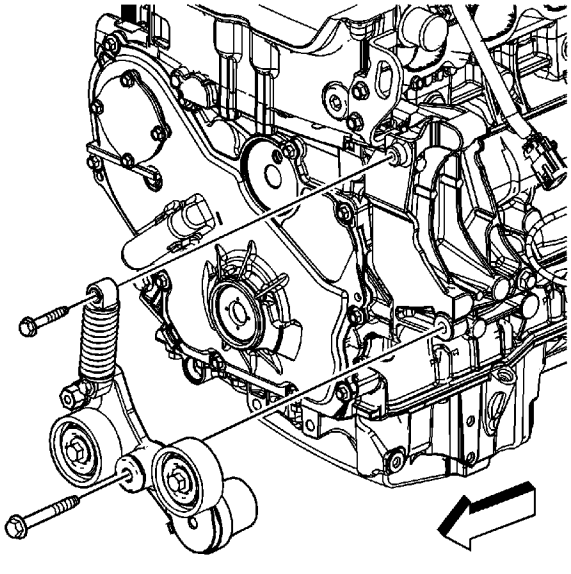

6. Install the accessory drive belt tensioner.
7. Install the accessory drive belt tensioner bolt and tighten to **45 N·m (33 lb ft)**.

Oil Pan Installation

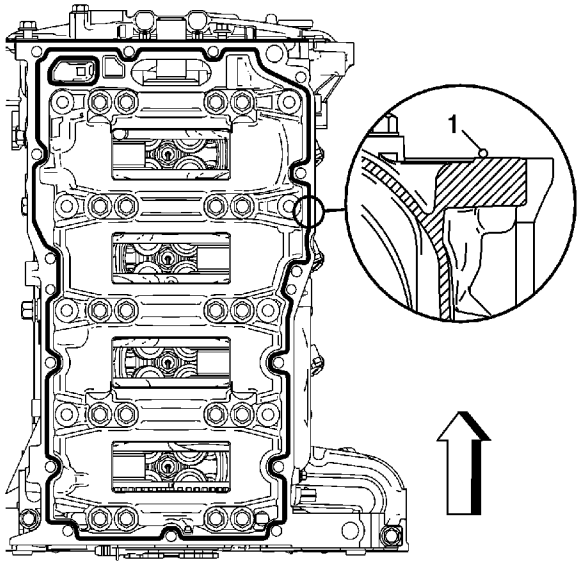

Note:

- The lower crankcase surface must be free of contamination prior to applying the sealer.
- Install and align the oil pan to block within 20 minutes of applying the sealer.
- The oil pan must be fastened to final torque specification within 60 minutes of applying the sealer.

1. Apply a 2.25 mm bead of sealer (1) on the level part of the flange next to the chamfer around the perimeter of the oil pan and the oil suction port opening. Refer to Adhesives, Fluids, Lubricants, and Sealers.

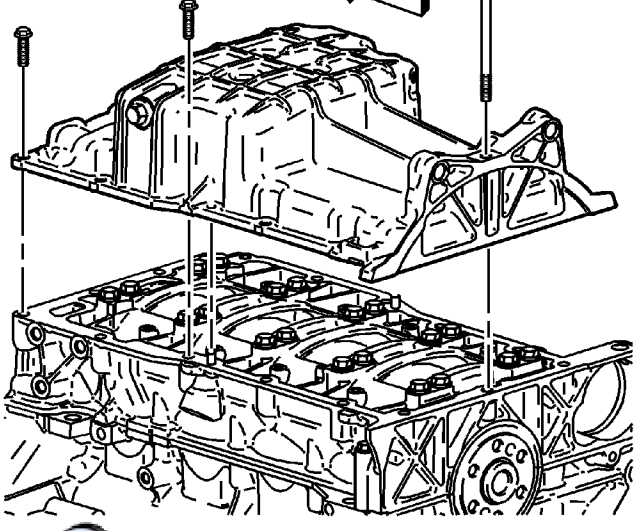

2. Install the oil pan.

Caution: Refer to Fastener Caution in the Preface section.

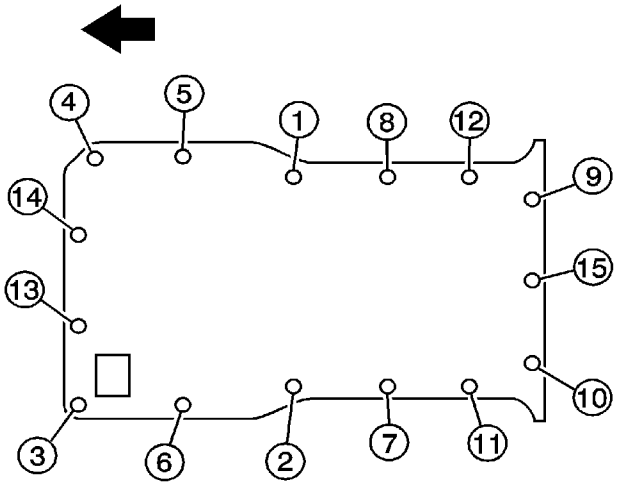

3. Install the oil pan bolts and tighten to **25 N·m (18 lb ft)** in sequence.

Crankshaft Balancer Installation

Special Tools

- *EN-48585* Crankshaft Balancer Guide
- *EN-48953* Camshaft Actuator Locking Tool
- *J 38112-A* Crankshaft Balancer Holder
- *J 45059* Angle Meter

For equivalent regional tools, refer to Special Tools.

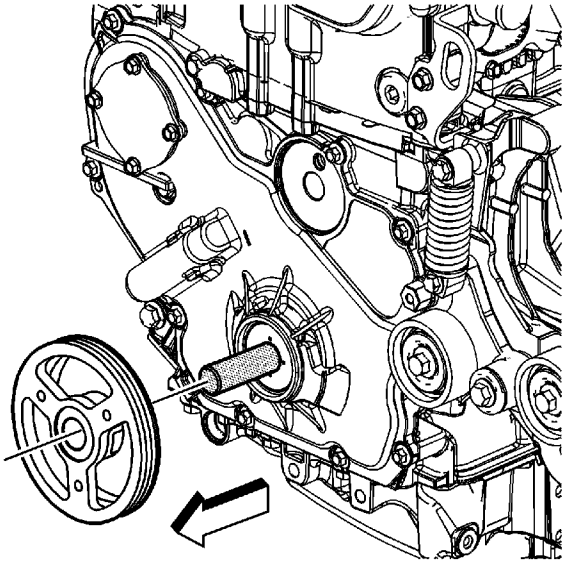

Caution: Ensure both components are aligned correctly or serious engine damage will occur.

1. Install the *J 38112-A* holder into the end of the crankshaft.
2. Install the balancer onto the *EN-48585* guide . Use care to properly align the keyway and flats on the balancer with the oil pump drive.

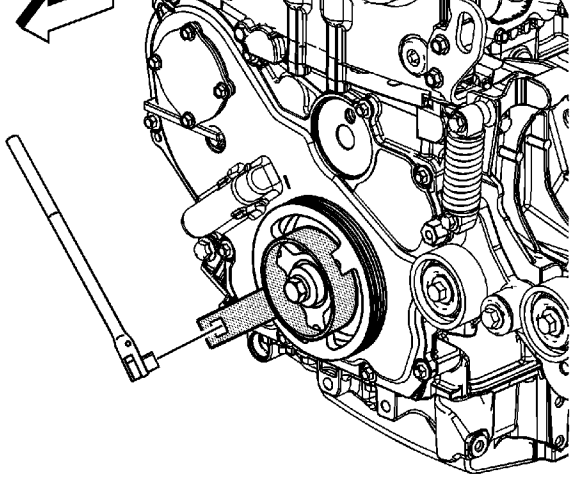

3. Install the *J 38122-A* holder .

Caution: Refer to Fastener Caution in the Preface section.

Note: Always install a new crankshaft balancer retaining bolt and washer.

4. Install a new retaining bolt and washer. Use the *J 38122-A* holder and a breaker bar to prevent the crankshaft from rotating when tightening the bolt. Tighten the bolt to **100 N·m (74 lb ft)** plus 125 degrees using the *J 45059* meter .

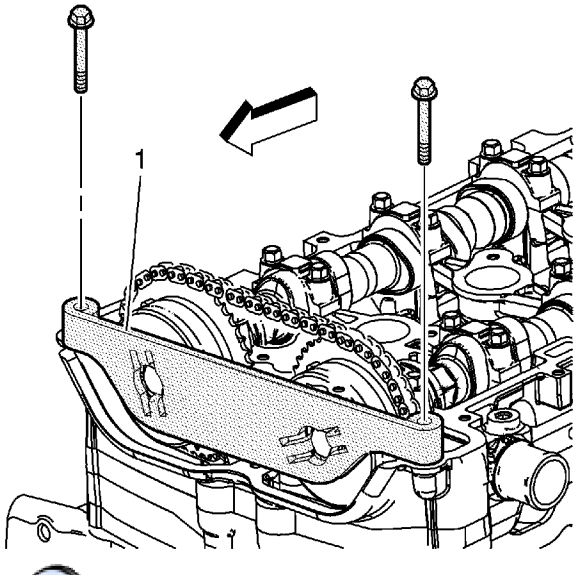

5. Install the *EN-48953* locking tool (1) and tighten the bolts into the cylinder head. Tighten the *EN-48953* locking tool retaining bolts to **10 N·m (89 lb in)**.
6. Release the timing chain tensioner by applying **45 N·m (33 lb ft)** counterclockwise torque to the crankshaft balancer bolt.

Camshaft Cover Installation

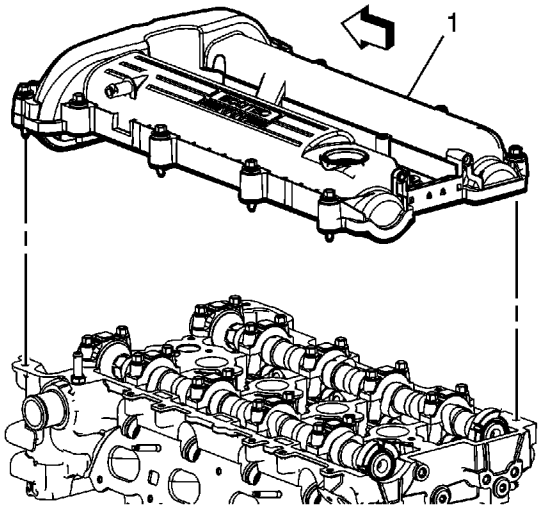

1. Install NEW camshaft cover grommets and camshaft cover bolts if they are serviced with the grommet.
2. Assemble the camshaft cover (1) and a NEW gasket. Ensure that the gasket is located in the retaining groove in the camshaft cover.

   Caution: Refer to Fastener Caution in the Preface section.

3. Install the cover on the cylinder head and hand start the bolts. Tighten the bolts to **10 N·m (89 lb in)**.

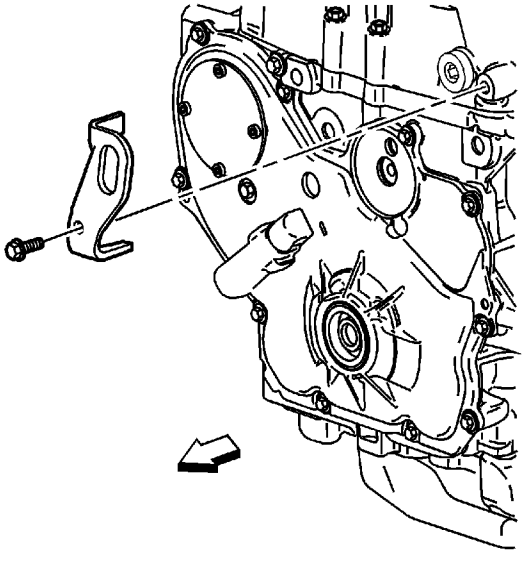

4. Install the front lift bracket.
5. Install the front lift bracket bolt and tighten to **25 N·m (18 lb ft)**.

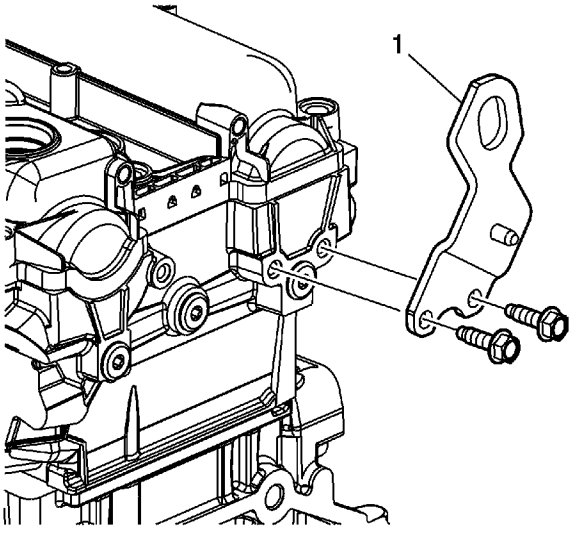

6. Install the rear lift bracket (1).
7. Install the rear lift bracket bolts and tighten to **25 N·m (18 lb ft)**.

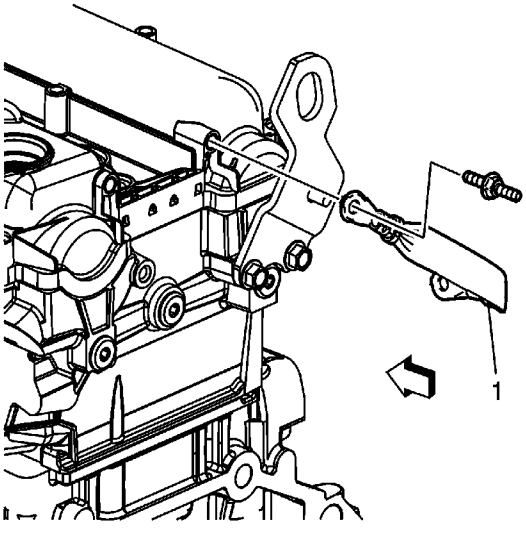

8. Install the ground strap (1) and tighten the bolts to **10 N·m (89 lb in)**.

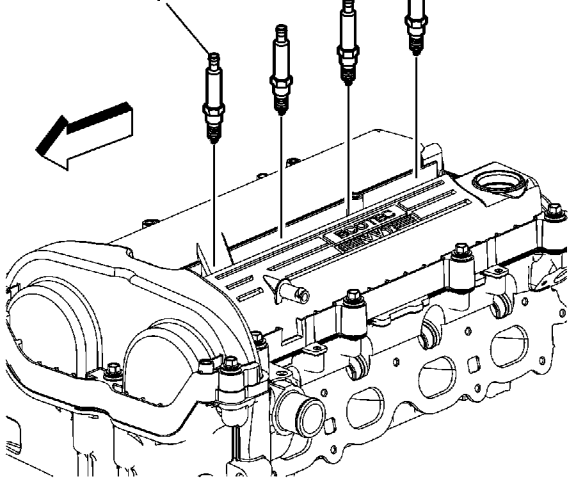

9. Install the spark plugs (1) and tighten to **20 N·m (15 lb ft)**.

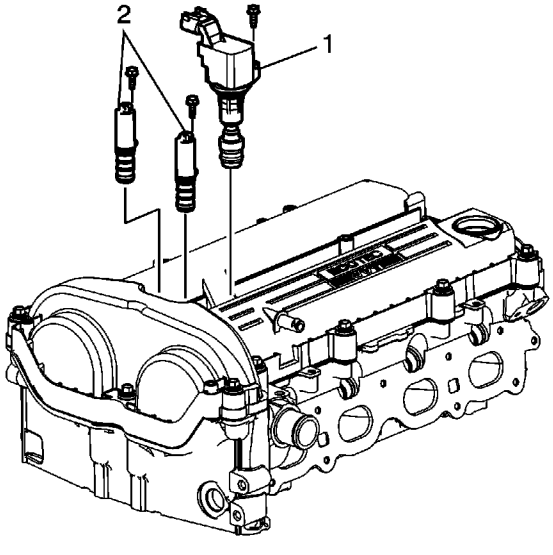

10. Install the ignition coil (1) and tighten the bolt to **10 N·m (89 lb in)**.
11. Install the camshaft position actuator solenoid valves (2).
12. Install the camshaft position actuator solenoid valve bolts and tighten to **10 N·m (89 lb in)**.

Oil Filter with Cap and Seal Installation

Special Tools

EN-44887 Oil Filter Wrench

For equivalent regional tools, refer to Special Tools.

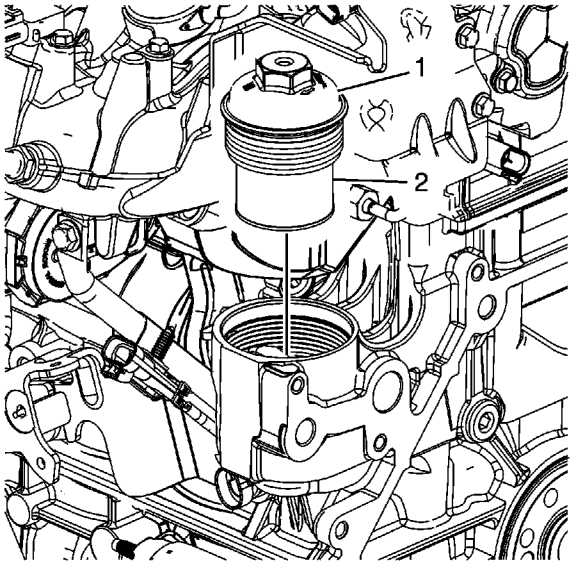

1. Install a new oil filter (2) on the oil filter cap (1).
2. Lubricate the O-ring on the oil filter cap with 5W30 engine oil.

   Caution: Refer to Fastener Caution in the Preface section.

3. Use *EN-44887* wrench to install the oil filter cap. Tighten the oil filter cap to **22 N·m (16 lb ft)**.

Intake Manifold Installation

Caution: Refer to Fastener Caution in the Preface section.

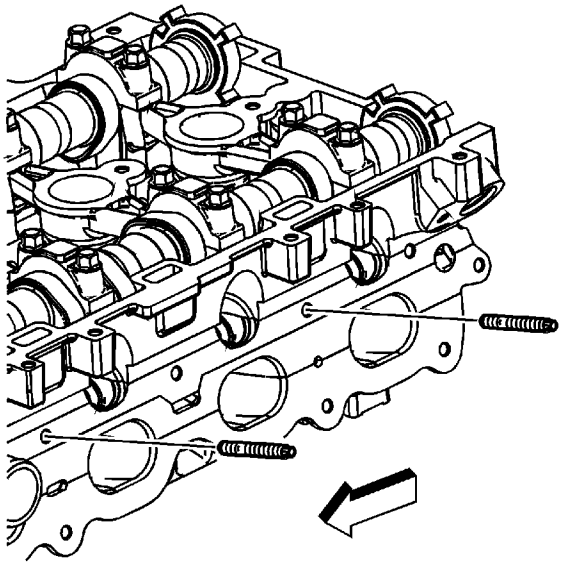

1. Install the intake manifold studs in the manifold face and tighten to **6 N·m (53 lb in)**.

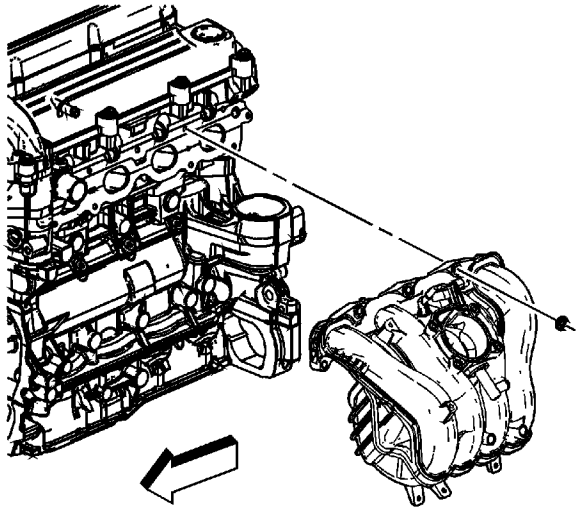

2. Install a new intake manifold gasket on the intake manifold.
3. Install the intake manifold.
4. Install the intake manifold bolts and nuts. Follow the tightening sequence. Tighten the bolts

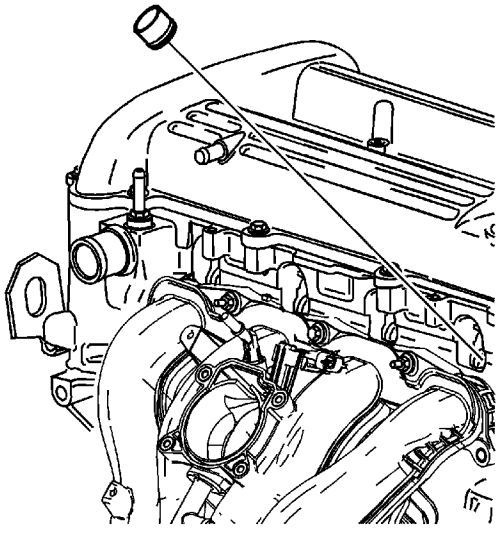

5. Lubricate NEW fuel injector tip insulators with engine oil.
6. Install NEW fuel injector tip insulators.

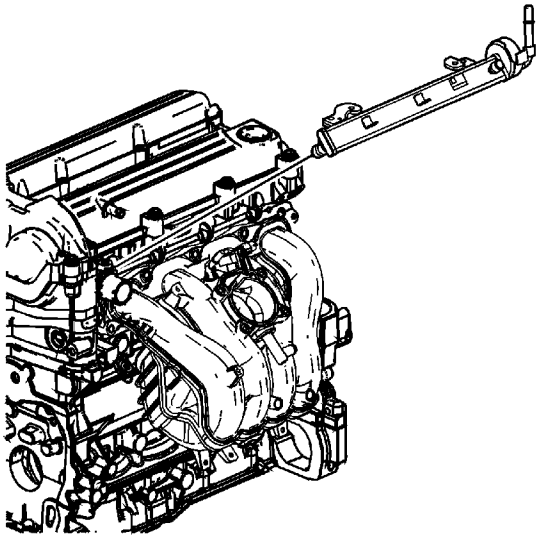

7. Lubricate the fuel injector oil rings with engine oil.
8. Install the fuel rail assembly.
9. Install the fuel rail fastener and tighten to **10 N·m (89 lb in)**.

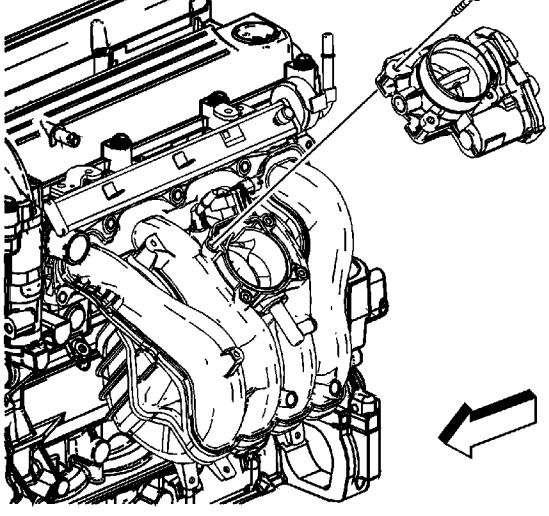

10. Install a new throttle body gasket.
11. Install the throttle body.
12. Install the throttle body bolts and tighten to **10 N·m (89 lb in)**.

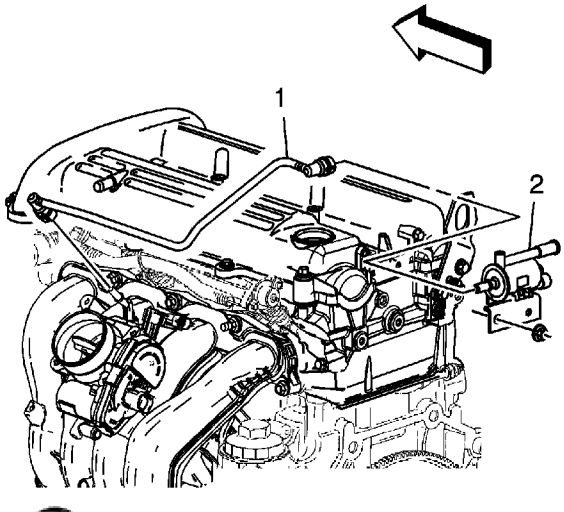

13. Install the EVAP canister valve (2) and tighten to **25 N·m (18 lb ft)**.
14. Install the EVAP canister valve tube (1).

Exhaust Manifold Installation

Caution: Refer to Fastener Caution in the Preface section.

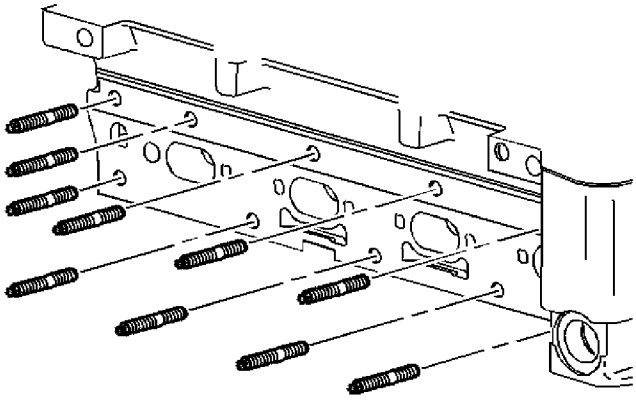

1. Install new exhaust manifold studs and tighten to **10 N·m (89 lb in)**.

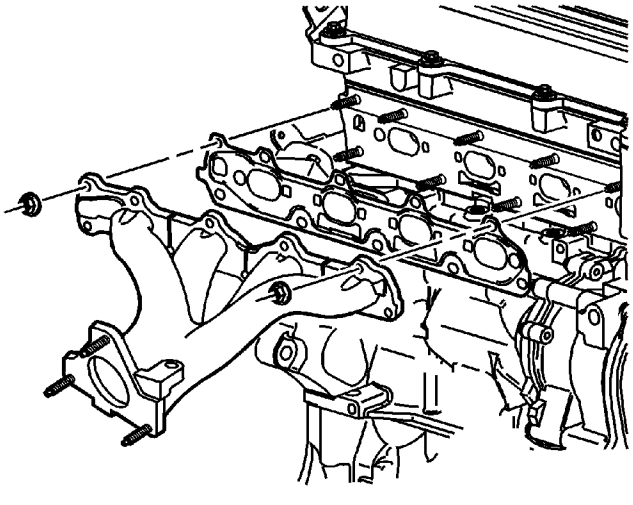

2. Install the exhaust manifold gasket.
3. Install the exhaust manifold to the cylinder head.
4. Install NEW exhaust manifold to cylinder head retaining nuts finger tight.

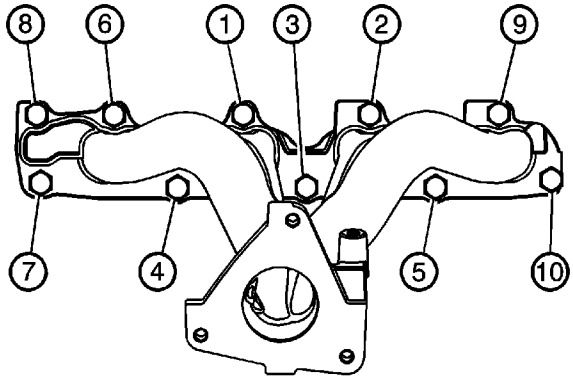

5. Tighten the NEW exhaust manifold to cylinder head retaining nuts in sequence. Tighten the nuts a second time to **14 N·m (124 lb in)**.

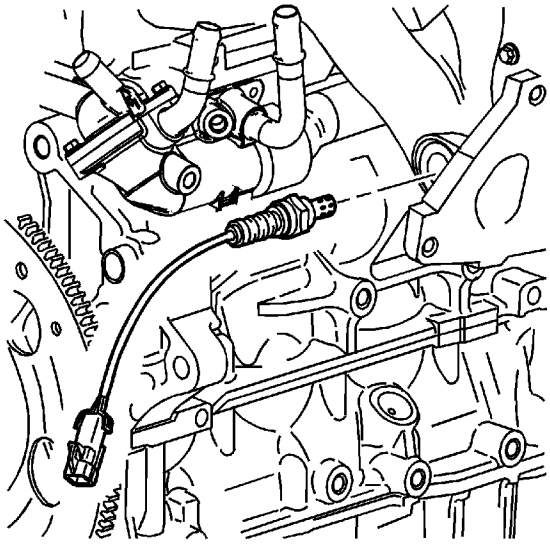

6. Coat the threads of the oxygen sensor with antiseize GM P/N 12397953 or equivalent.
7. Install the oxygen sensor and tighten to **42 N·m (31 lb ft)**.

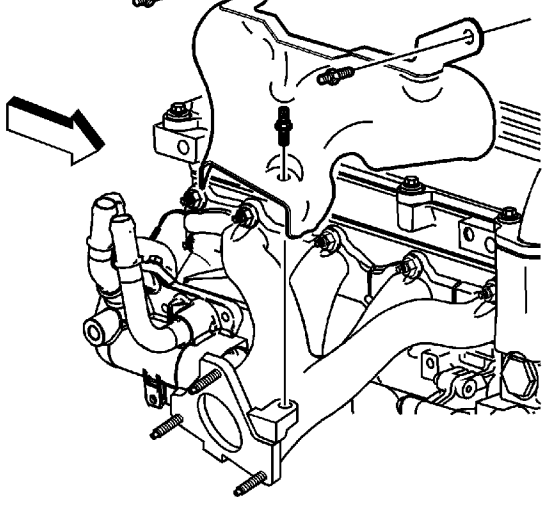

8. Install the exhaust manifold heat shield.
9. Install the exhaust manifold heat shield bolts and tighten to **25 N·m (18 lb ft)**.

Oil Level Indicator and Tube Installation

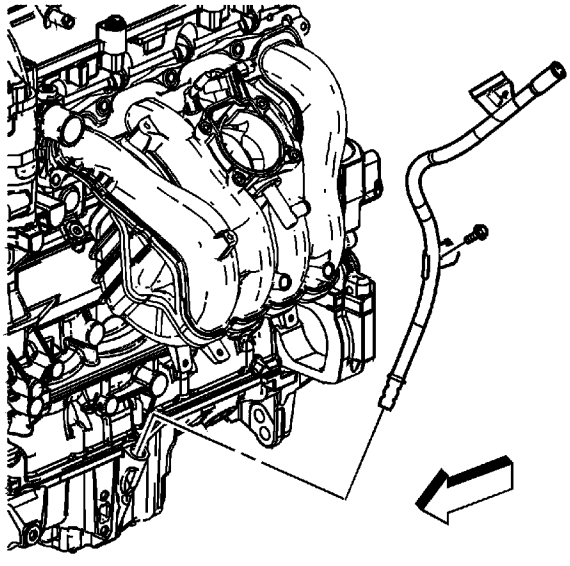

1. Lubricate the oil level indicator tube O-ring with GM P/N 12345501 (Canadian P/N 992704) or equivalent.
2. Install the oil level indicator and the oil level indicator tube into the oil pan.

   Caution: Refer to Fastener Caution in the Preface section.

3. Install the oil level indicator tube bracket to the intake manifold bolt and tighten to **10 N·m (89 lb in)**.
4. Install the electrical wiring harness to the oil level indicator tube.
5. Install the knock sensor wiring clip into the oil level indicator tube.

Engine Flywheel Installation

Special Tools

- *EN-38122-A* Crankshaft Balancer Holder
- *EN-43653* Flywheel Holding Tool
- *EN-45059* Angle Meter

For equivalent regional tools, refer to Special Tools.

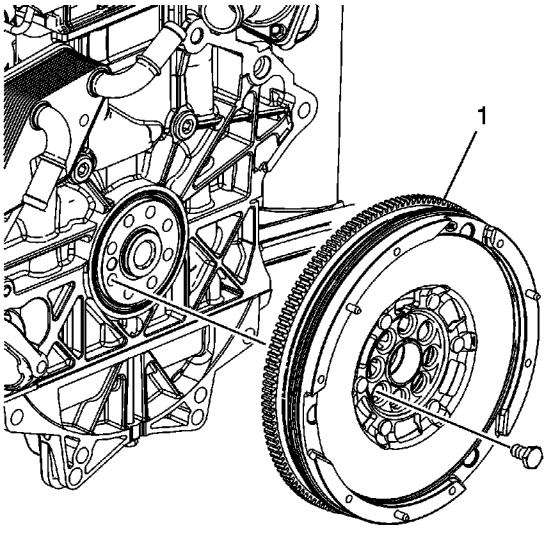

1. Install the flywheel (1) for vehicles with manual transmission.
2. Install the NEW bolts.

   Caution: Refer to Fastener Caution in the Preface section.

   Note: *EN-43653* flywheel holding tool may be used instead of *EN-38122-A* holder in order to prevent crankshaft rotation.

3. Holding the crankshaft balancer with *EN-38122-A* holder , tighten the bolts evenly. Tighten the bolts to **53 N·m (39 lb ft)** , plus 25 degrees using the *EN-45059* meter

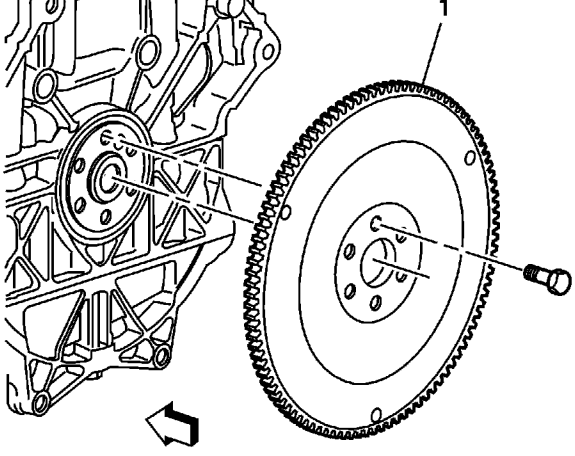

4. Install the flywheel (1) for vehicles with automatic transmission.
5. Install the NEW bolts.

   Caution: Refer to Fastener Caution in the Preface section.

   Note: *EN-43653* flywheel holding tool may be used instead of *EN-38122-A* holder in order to prevent crankshaft rotation.

6. Holding the crankshaft balancer with *EN-38122-A* holder , tighten the bolts evenly. Tighten the bolts to **53 N·m (39 lb ft)** , plus 25 degrees using the *EN-45059* meter

Engine Prelubing

Special Tools

EN-45299 Engine Preluber

For equivalent regional tools, refer to Special Tools.

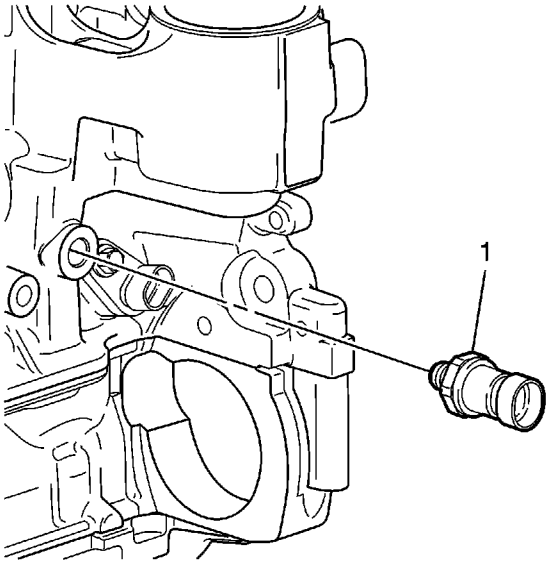

Note: A constant and continuous flow of clean engine oil is required in order to properly prime the engine. Ensure an approved engine oil is used, as specified in the owners manual.

1. Remove the oil pressure switch.
2. Install the M12 x 1.75 adapter (1) P/N 509376.

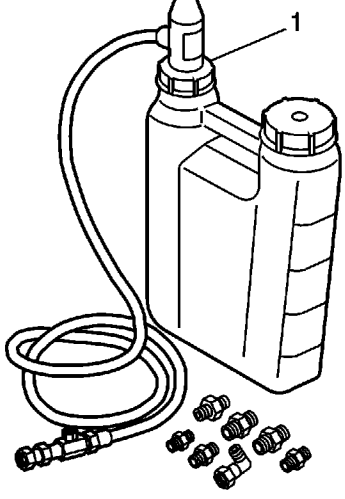

3. Install the flexible hose to the adapter and open the valve.
4. Pump the handle on the *EN-45299* preluber (1) in order to flow a minimum of 1-1.9 liters (1-2 quarts) of engine oil. Observe the flow of engine oil through the flexible hose and into the engine assembly.
5. Close the valve and remove the flexible hose and adapter from the engine.

Caution: Refer to Fastener Caution in the Preface section.

6. Install the oil pressure switch to the engine and tighten to **22 N·m (16 lb ft)**.
7. Top-off the engine oil to the proper level.